V1.4-2026-09-24

Commercial & Industrial Grid-tied Inverter

GT G1 100-150kW

- GW100K-GT-L-G10
- GW150K-GT-G10

User Manual

GOODWE

Copyright Statement

Copyright © GoodWe Technologies Co., Ltd. 2026. All rights reserved.

Without the authorization of GoodWe Technologies Co., Ltd., no part of this manual may be reproduced, transmitted, or uploaded to public networks or other third-party platforms in any form.

Trademark Authorization

GOODWE and other GOODWE trademarks used in this manual are the property of GoodWe Technologies Co., Ltd. All other trademarks or registered trademarks mentioned in this manual are the property of their respective owners.

NOTICE

Due to product version upgrades or other reasons, the document content will be updated from time to time. Unless otherwise specified, the document content does not replace the safety precautions on the product labels. All descriptions in this document are for guidance only.

Preface

This document mainly introduces the product information, installation and wiring, configuration and commissioning, troubleshooting, and maintenance of the inverter. Before installing and using this product, carefully read this manual to understand the product safety information and become familiar with the product functions and features. The document may be updated from time to time; please obtain the latest version and more product information from the official website.

Applicable Products

This document applies to the following inverter models:

Model	Rated Output Power	Rated Output Voltage
GW150K-GT-G10	150kW	220/380V, 3L/N/PE or 3L/PE (China)
		220/380, 230/400, 240/415, 277/480V, 3L/N/PE or 3L/PE (Overseas)
GW100K-GT-L-G10	100kW	127/220V, 133/230V, 3L/N/PE or 3L/PE

Applicable Personnel

Only applicable to professionals who are familiar with local laws, regulations, standards, and electrical systems, have received professional training, and are knowledgeable about this product.

Symbol Definitions

To better use this manual, the following symbols are used in the manual to highlight relevant important information. Please read the symbols and descriptions carefully.

⚠DANGER
Indicates a high-potential hazard that, if not avoided, will result in death or serious injury.

⚠WARNING
Indicates a moderate potential hazard that, if not avoided, could result in death or serious personal injury.

⚠CAUTION
Indicates a low potential hazard that, if not avoided, may result in moderate or minor personal injury.

NOTICE
Emphasizes and supplements the content, and may also provide tips or tricks for optimal product use, helping you solve a problem or save time.

Table of Contents

1 Safety Precautions 7
1.1 General Safety 7
1.2 DC Side 7
1.3 AC Side 8
1.4 Inverter 9
1.5 European Declaration of Conformity 10
1.5.1 Devices with Wireless Communication Function 10
1.5.2 Devices Without Wireless Communication Function 10
1.6 Personnel Requirements 10
2 Product Introduction 12
2.1 Introduction 12
2.2 Circuit Block Diagram 12
2.3 Supported Grid Types 13
2.4 Appearance Description 13
2.4.1 Appearance Description 13
2.4.2 Product Dimensions 15
2.4.3 Indicator Description 15
2.4.4 Nameplate Description 16
2.5 Features 17
2.6 Inverter Operating Mode 19
3 Equipment Inspection and Storage 22

3.1 Equipment Inspection 22
3.2 Delivered Items 22
3.3 Equipment Storage 23
4 Installation 25
4.1 Installation Requirements 25
4.2 Installing the Inverter 28
4.2.1 Moving the Inverter 28
4.2.2 Installing the Inverter 28
5 Electrical Connection 31
5.1 Safety Precautions 31
5.2 Connect Protection Grounding Cable 32
5.3 Connect AC Output Cables 33
5.4 Connect DC Input Cables 36
5.5 Communication Connection 40
5.5.1 RS485 Communication Networking Solution 40
5.5.2 Power Limitation and Load Monitoring 41
5.5.3 Connect Communication Cables 45
6 Equipment Commissioning 50
6.1 Pre-Power-on Check 50
6.2 Powering on the Device 50
7 System Commissioning 52
7.1 Setting Inverter Parameters via App 52

7.2 Plant Monitoring via SEMS+ 52
8 System Maintenance 54
8.1 Powering off the Inverter 54
8.2 Remove the Inverter 54
8.3 Scrap the Inverter 55
8.4 Troubleshooting 55
8.5 Periodic Maintenance 68
9 Technical Specifications 71
10 Glossary 77
11 Obtaining Related Product Manuals 79
12 Contact Information 80

1 Safety Precautions

⚠WARNING
The inverter has been designed and tested in strict accordance with safety regulations. However, as electrical equipment, the relevant safety instructions must be observed before any operation on the equipment. Improper operation may cause serious injury or property damage.

1.1 General Safety

NOTICE
• Due to product version upgrades or other reasons, the document content will be updated from time to time. Unless otherwise specified, the document content does not replace the safety precautions on the product labels. All descriptions in this document are for guidance only. • Before installing the equipment, carefully read this document to understand the product and precautions. • All operations on the equipment must be performed by professional and qualified electrical technicians, and the technicians must be familiar with the relevant standards and safety regulations of the project location. • When operating the equipment, use insulated tools and wear personal protective equipment to ensure personal safety. When touching electronic components, wear electrostatic gloves, ESD wrist straps, anti-static clothing, etc., to provide Protection for the equipment against electrostatic damage. • Unauthorized disassembly or modification may cause equipment damage, and such damage is not covered by the warranty. • Equipment damage or personal injury caused by failure to install, use, or configure the equipment in accordance with this document or the corresponding user manual is not within the responsibility of the equipment manufacturer. • For more product warranty information, please visit the official website:https://www.goodwe.com/warrantyrelated.html。

1.2 DC Side

⚠ DANGER

- Please use the DC Connector supplied with the box to connect the inverter DC cables. If a DC Connector of another model is used, it may cause serious consequences; equipment damage caused thereby is not within the scope of the equipment manufacturer's responsibility.
- Before connecting the PV strings to the inverter, confirm the following information; otherwise, the inverter may be permanently damaged, and in severe cases, a fire may occur, causing personal injury and property loss. Damage or injury caused by failure to operate in accordance with this document or the corresponding user manual is not covered by the warranty.
  - Ensure that the positive pole of the PV string is connected to the PV+ of the inverter, and the negative pole of the PV string is connected to the PV- of the inverter.
  - Please ensure that the open-circuit voltage of the PV strings connected to each MPPT does not exceed 1100 V. When the input voltage is 1000 V - 1100 V, the inverter enters standby mode. When the voltage recovers to 180 V - 1000 V, the inverter will resume normal operation.

⚠ WARNING

- Ensure that the module frames and mounting bracket system are properly grounded.
- After the DC cables are connected, ensure that the cable connections are secure and not loose.
- PV modules used with the inverter must comply with IEC 61730 Class A.
- PV strings connected to the same MPPT must use the same model and the same number of PV modules.
- To maximize the inverter's power generation Efficiency, ensure that the Maximum Power Point Voltage of the series-connected PV modules is within the inverter's MPPT full-load Voltage Range.
- Please ensure that the voltage difference between different MPPT channels is less than or equal to 150 V.
- Please ensure that the input current of each MPPT is less than or equal to the inverter's Max. MPPT Current, see technical data.
- When multiple PV strings are connected to the inverter, the number of connected MPPTs must be maximized.

1.3 AC Side

⚠WARNING

- Ensure that the voltage and frequency at the grid connection point comply with the inverter's grid connection specifications.
- It is recommended to add Protection devices such as circuit breakers or fuses on the AC side of the inverter. The specifications of the Protection device must be greater than 1.25 times the inverter's Max. Current to Grid.
- Copper-core cables are recommended for AC output cables. If aluminum cables are required, use copper-aluminum transition terminals for connection.

1.4 Inverter

⚠DANGER

- During inverter installation, avoid placing load on the bottom wiring terminals; otherwise, terminal damage may result.
- After the inverter is installed, the labels and warning signs on the enclosure must be clearly visible. Covering, altering, or damaging them is prohibited.
- The warning labels on the inverter enclosure are as follows:

No.	Symbol	Meaning
1		Potential hazards exist during equipment operation. Take proper protective measures when operating the equipment.
2		High voltage hazard. High voltage is present during equipment operation. Before operating the equipment, ensure that it has been de-energized.
3		The inverter surface is hot. Do not touch it while the equipment is running; otherwise, burns may result.
4		Delayed discharge. After the equipment is powered off, wait 5 minutes until the equipment is fully discharged.

5		Before operating the equipment, read the product manual carefully.
6		The equipment must not be disposed of as household waste. Dispose of it in accordance with local laws and regulations, or return it to the equipment manufacturer.
7		Protection grounding conductor connection point.
8		CE Certification Mark.

1.5 European Declaration of Conformity

1.5.1 Devices with Wireless Communication Function

Equipment with wireless communication functions that can be sold in the European market meets the following directive requirements:

- Radio Equipment Directive 2014/53/EU (RED)
- Restrictions of Hazardous Substances Directive 2011/65/EU and (EU) 2015/863 (RoHS)
- Waste Electrical and Electronic Equipment 2012/19/EU
- Registration, Evaluation, Authorization and Restriction of Chemicals (EC) No 1907/2006 (REACH)

1.5.2 Devices Without Wireless Communication Function

Equipment without wireless communication functions that can be sold in the European market meets the following directive requirements:

- Electromagnetic compatibility Directive 2014/30/EU (EMC)
- Electrical Apparatus Low Voltage Directive 2014/35/EU (LVD)
- Restrictions of Hazardous Substances Directive 2011/65/EU and (EU) 2015/863 (RoHS)
- Waste Electrical and Electronic Equipment 2012/19/EU
- Registration, Evaluation, Authorization and Restriction of Chemicals (EC) No 1907/2006 (REACH)

1.6 Personnel Requirements

NOTICE

To ensure the safety, compliance, and efficiency of the entire process of equipment transportation, installation, wiring, operation, and maintenance, operations must be performed by professionals or qualified personnel.

1. Professionals or qualified personnel include:
   - Personnel who have mastered the equipment working principles, system structure, and knowledge of risks and hazards, and who have received professional operation training or have extensive practical experience.
   - Personnel who have received relevant technical and safety training, have certain operating experience, are able to recognize the dangers that specific operations may pose to themselves, and can take protective measures to minimize risks to themselves and others.
   - Qualified electrical technicians who meet the regulatory requirements of the country/region where they are located.
   - Personnel with an electrical engineering degree / advanced diploma or equivalent in electrical discipline / professional qualification in the electrical field, and at least 2/3/4 years of experience in testing and supervisory work using safety standards for electrical equipment.
2. Personnel involved in special tasks such as electrical work, work at height, and special equipment operation must hold valid qualification certificates required by the location of the equipment.
3. Medium-voltage equipment operations must be performed by certified high-voltage electricians.
4. Equipment and component replacement may only be performed by authorized personnel.

2 Product Introduction

2.1 Application Scenarios

The GT series inverter is a three-phase string PV grid-connected inverter. The inverter can convert the DC power generated by PV solar panels into AC power that meets grid requirements and feed it into the grid. The main application scenarios of the inverter are as follows:

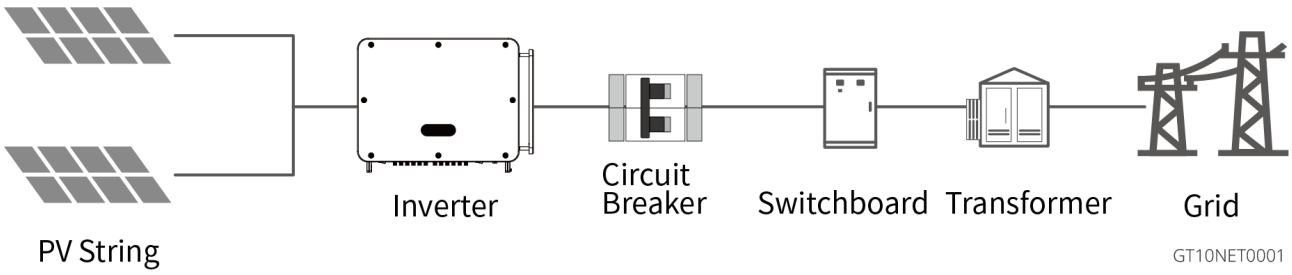

Model Nomenclature

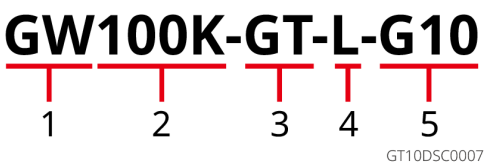

No.	Meaning	Description
1	Brand Code	GW: GoodWe
2	Rated Power	150K: Rated Power is 150kW
3	Series Name	GT: GT Series
4	Type of Electrical Supply System	L: Low-voltage grid
5	Version Code	G10: First-generation product

2.2 Circuit Block Diagram

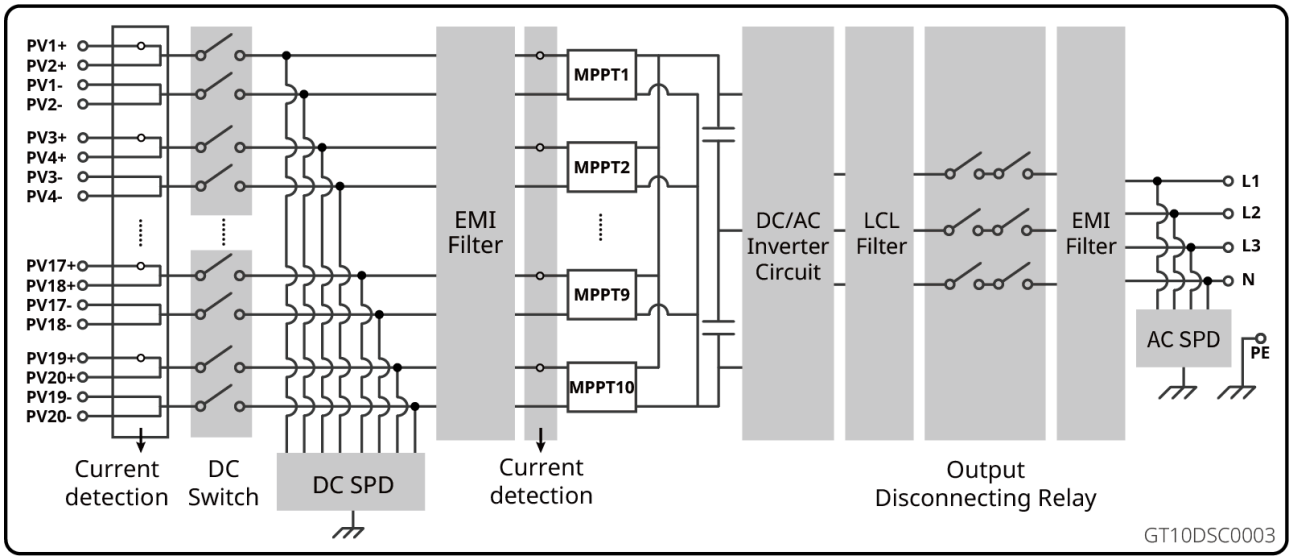

2.3 Supported Grid Types

NOTICE
For the TT grid type, the RMS voltage between the neutral line and the ground line must be less than 20 V.

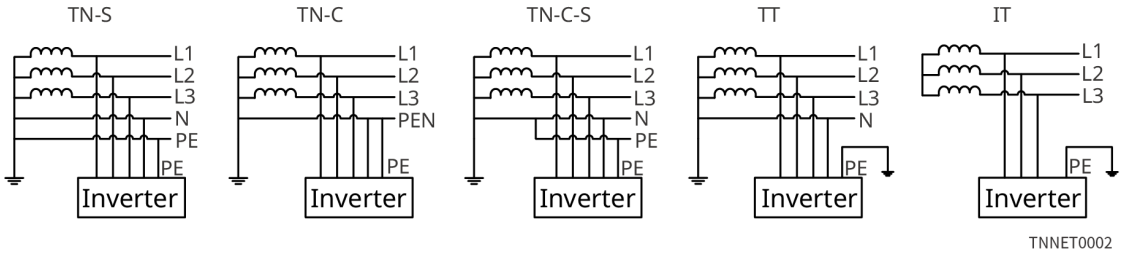

2.4 Appearance & Dimensions

Different inverter models vary in color and appearance; refer to the actual product.

2.4.1 Appearance Description

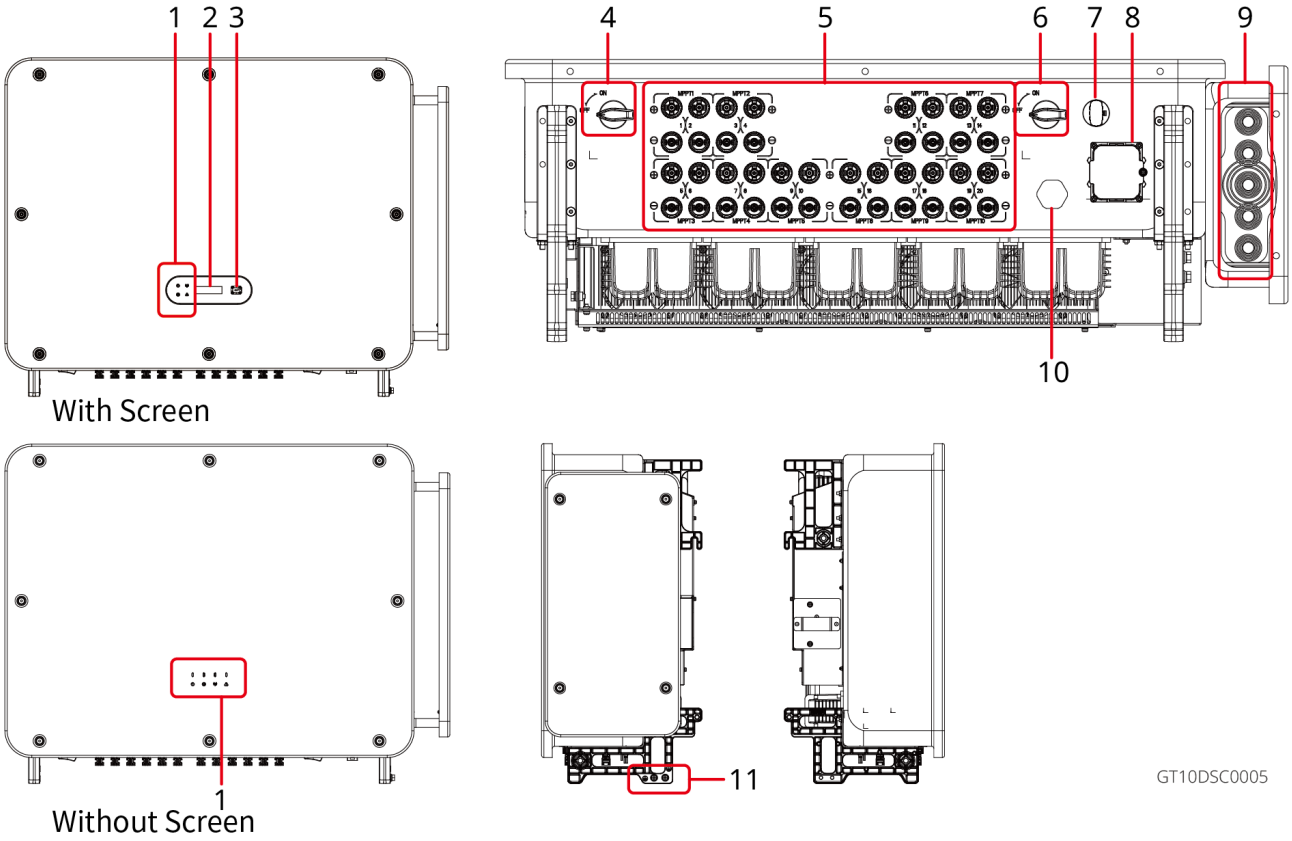

No.	Components	Description
1	Indicator Light	Indicates the operating status of the inverter
2	Display (Optional)	View inverter-related data (used with buttons)
3	Button (Optional)	Used to operate the display (used together with the display)
4	DC Switch 1	Controls the connection or disconnection of DC input MPPT1-5
5	PV Input Terminals	Can be connected to PV module DC input cables
6	DC Switch 2	Controls the connection or disconnection of DC input MPPT6-10
7	Smart Dongle Port	Can be connected to a Smart Dongle; select the Smart Dongle type according to actual requirements

8	Communication port	Contains multiple communication interfaces, such as RS485, etc., used to connect corresponding functional communication cables.
9	AC cable entry hole	AC output cable entry/exit hole
10	Vent Valve	Waterproof and breathable, balancing internal and external air pressure
11	Protection Grounding Terminal	Connect Protection Grounding Cable

2.4.2 Product Dimensions

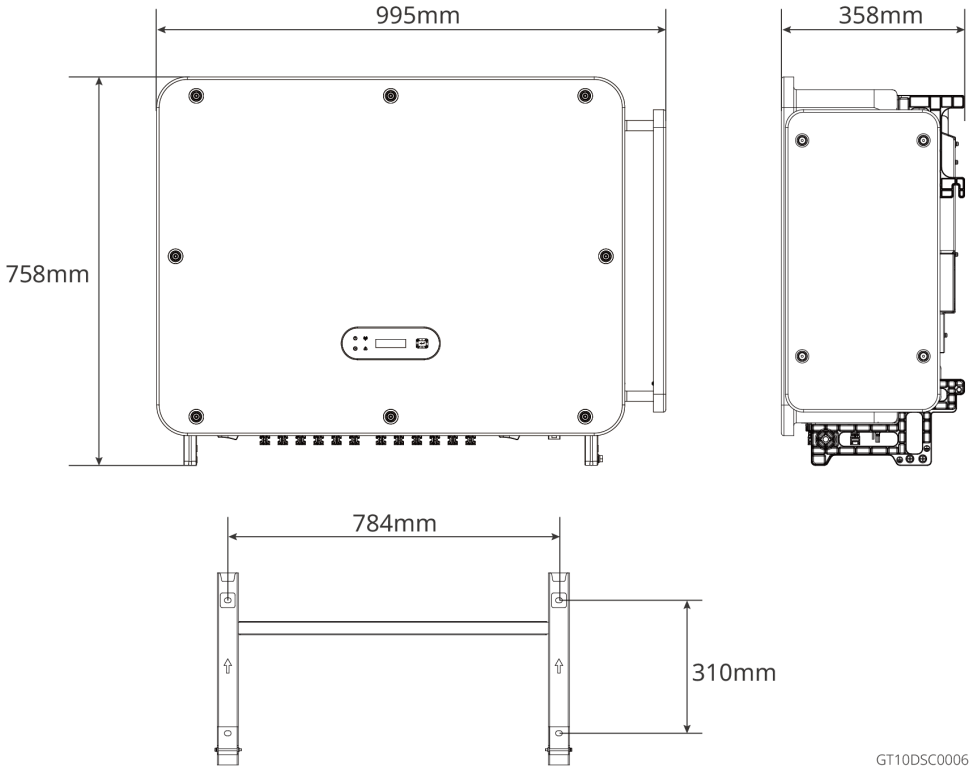

2.4.3 Indicator Description

Indicator Light	Status	Description
电源 Power		Solid On: Device powered on
		Off: Device not powered on
运行 Running		Solid On: Grid normal, grid connection successful
		Off: Not connected to grid
		Single slow flash: Self-check before grid connection
		Single fast flash: Grid connection imminent
Communication		Solid On: Wireless monitoring normal
		Single flash: Wireless module reset or restore
		Two flashes: Not Connected to base station or router
		Four flashes: Not Connected to monitoring server
		Flashing: RS485 communication normal
		Off: Wireless module is restoring factory settings
故障 Fault		Solid On: System fault
		Off: No fault

2.4.4 Nameplate Description

The nameplate is for reference only. Please refer to the actual product.

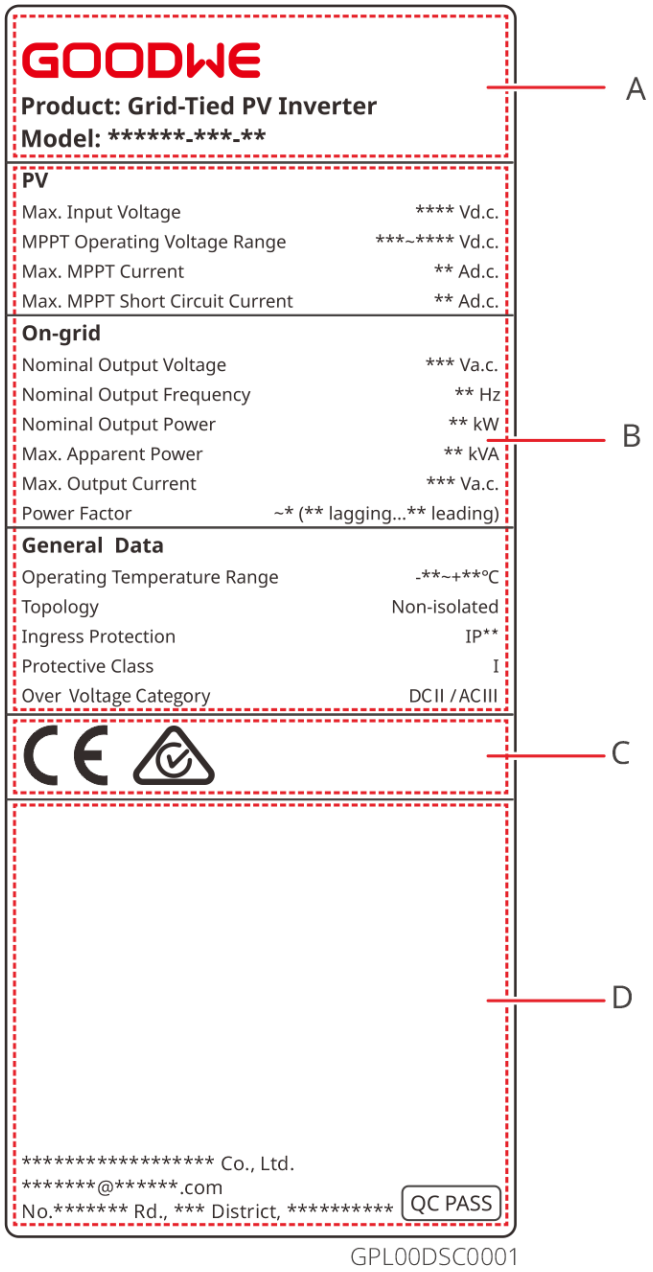

A	B	C	D
GoodWe Trademark and Product Type and Model	Product Technical Specifications	Product Safety Symbols and Certification Marks	Contact Information, Serial Number Information

2.5 Features

AFCI

The inverter integrates an AFCI circuit Protection device to detect Arc Fault (arc fault) and quickly cut off the circuit upon detection, thereby preventing electrical fires.

Causes of Arcing:

- Connector connections in the PV system become damaged.
- Cable connection error or damage.
- Connector and cable aging.

Troubleshooting method:

- The inverter integrates AFCI function, compliant with IEC 63027.
- When the inverter detects an arc fault, the time when the alarm occurred and the alarm phenomenon can be viewed through the App.
- After the inverter triggers an AFCI alarm, it will shut down for Protection; after the alarm is cleared, the inverter automatically reconnects to the grid and resumes operation.
  - Auto reconnect: If the inverter triggers AFCI alarms <5 times within 24 hours, the alarm can be automatically cleared after five minutes, and the inverter will reconnect to the grid and operate;
  - Manual reconnection: If the inverter triggers the 5th AFCI alarm within 24 hours, the alarm must be manually cleared before the inverter can reconnect to the grid and operate. For detailed operations, refer to the SolarGo App User Manual.

Model	Label	Description
GW150K-GT-G10	F-I-AFPE-1-4/6/4/6-4	F (Full coverage): Full coverage of inverter PV input ports I (Integrated): AFPE (arc fault protection equipment) integrated in the inverter: combines two AFCI Detection functions, AFD and AFI 1: A pair of PV input ports (PV+, PV-) connected to one PV input string 4/6/4/6: Number of PV input ports detected by one AFCI Detection sensor 4: Number of AFCI Detection sensors

PID Recovery (Optional)

During operation of PV modules, due to the potential difference between the output electrodes and the grounded frame of the modules, over time this can cause degradation in the modules' power generation Efficiency, i.e., potential-induced degradation (PID).
The PID function of this device raises the voltage difference between the PV modules and their frames so that it becomes a positive voltage difference (referred to as positive voltage boost), thereby achieving PID suppression. It is applicable to P-type modules and N-type modules that require positive voltage boost to suppress the PID effect. For N-type modules that require reducing negative voltage to suppress the PID effect, it is recommended to disable this function. To determine whether an N-type module is of the type that requires positive voltage boost for PID suppression, please consult the module supplier.

Nighttime SVG (Optional)
The nighttime SVG (Static Var Generator) function means that the inverter can still provide Reactive Power Compensation at night or when there is no solar input, thereby improving the grid Power Factor, reducing grid losses, and maintaining voltage stability.

Nighttime Power Supply (Optional)
When there is insufficient or no sunlight at night, the inverter can draw power from the grid to maintain its basic functions (such as monitoring, communication, safety modules, etc.) and enable functions such as 24-hour load monitoring and nighttime remote upgrades.

2.6 Inverter Operating Mode

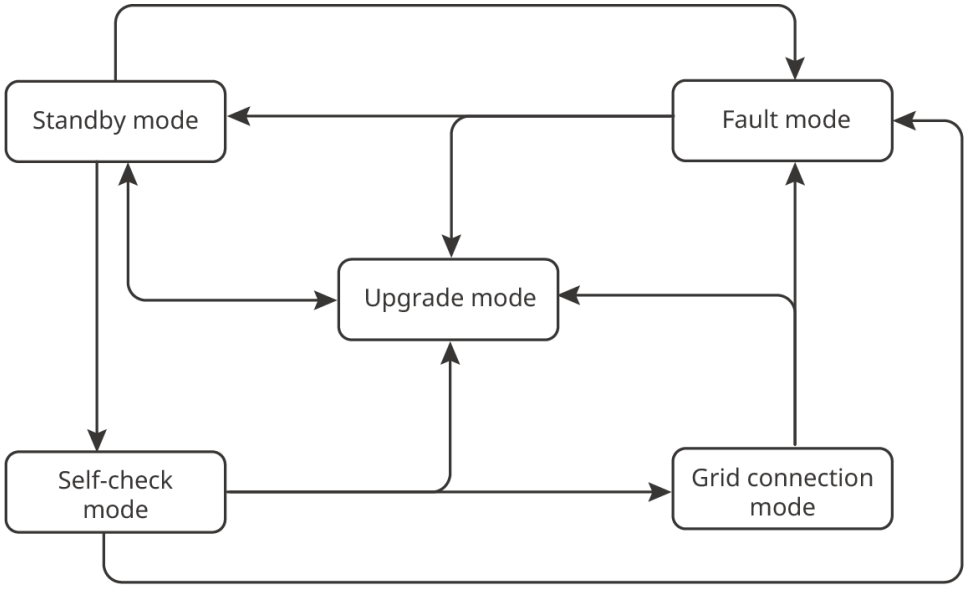

OMNET0001

No.	Components	Description
1	Waiting Mode	Waiting phase after the machine is powered on. • When the conditions are met, it enters self-test mode. • If a fault occurs, the inverter enters fault mode. • If an upgrade request is received, it enters upgrade mode.
2	Self-test Mode	Before the inverter starts, it continuously performs self-test, initialization, etc. • If the conditions are met, it enters grid-connected mode, and the inverter starts grid-connected operation. • If an upgrade request is received, it enters upgrade mode. • If the self-test fails, it enters fault mode.
3	Grid-connected Mode	The inverter operates normally in grid-connected mode. • If a fault is detected, it enters fault mode. • If an upgrade request is received, it enters upgrade mode.

4	Fault Mode	If a fault is detected, the inverter enters Fault Mode. After the fault is cleared, it enters Standby Mode. After Standby Mode ends, the inverter detects the operating status and then enters the next Operating Mode.
5	Upgrade Mode	When the inverter updates the program, it switches to this state. When the program update is complete, it enters Standby Mode. After Standby Mode ends, the inverter detects the operating status and then enters the next Operating Mode.

3 Equipment Inspection and Storage

3.1 Equipment Inspection

Before signing for receipt of the product, please carefully inspect the following:

1. Check whether the outer packaging is damaged, such as deformation, holes, cracks, or other signs that may cause damage to the equipment in the packaging box. If there is any damage, do not open the packaging and contact your dealer.
2. Check whether the inverter model is correct. If it does not match, do not open the packaging and contact your dealer.
3. Check whether the types and quantities of the delivered items are correct and whether there is any external damage. If there is any damage, please contact your dealer.

3.2 Delivered Items

NOTICE

- During electrical connection, please use the wiring terminals shipped with the box. Equipment damage caused by using incompatible connector models is not covered by the warranty.
- Depending on the inverter configuration, the quantities of fastening screws and pinhole terminals supplied with the box may vary. Please refer to the actual items.
- N indicates that the quantity of accessories supplied with the box depends on the product configuration.

Components	Quantity	Components	Quantity
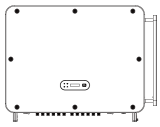	Inverter x 1	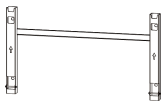	Backplate x 1

	2-pin terminal x N	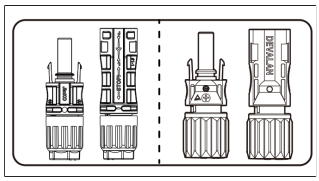	DC Connector x 16 or DC Connector x 14
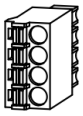	4-pin terminal x N	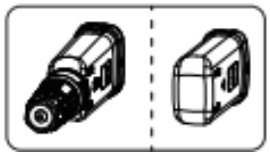	Smart communication stick x 1
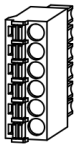	6-pin terminal x 1	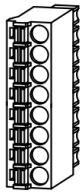	8-pin terminal x N
	Tubular terminal x N	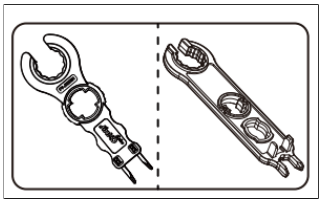	DC Connector wrench x 2
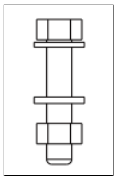	Combination screw x 4	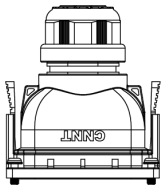	Communication protective cover x 1
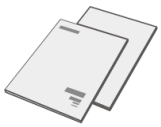	Product documents x 1	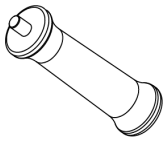	Handle x 1

N≥0: Quantity depends on product configuration

3.3 Equipment Storage

If the device is not put into use immediately, store it in accordance with the following requirements:

1. Ensure that the outer packaging box is not removed and the desiccant inside the box is not lost.
2. Ensure the storage environment is clean, with appropriate temperature and humidity ranges and no condensation.
3. Ensure that the stacking height and orientation of the inverter comply with the label instructions on the packaging box.
4. Ensure that there is no tipping risk after the inverter is stacked.
5. If the inverter has been stored for more than two years or has not been in operation for more than 6 months after installation, it is recommended to have it inspected and tested by professionals before putting it into use.
6. To ensure good electrical performance of the electronic components inside the inverter, it is recommended to power it on once every 6 months during storage. If it has not been powered on for more than 6 months, it is recommended to have it inspected and tested by professionals before putting it into use.

4 Installation

4.1 Installation Requirements

Installation Environment Requirements

1. The device must not be installed in flammable, explosive, corrosive, or similar environments.
2. The installation carrier shall be sturdy and reliable, and capable of supporting the Weight of the inverter.
3. The installation space must meet the device ventilation and heat dissipation requirements and operation space requirements.
4. The device's Ingress Protection Rating shall meet the requirements for indoor and outdoor installation, and the temperature and humidity of the installation environment must be within the appropriate range.
5. The inverter must be installed away from direct sunlight, rain, snow accumulation, etc. It is recommended to install it in a sheltered location; if necessary, a sunshade can be erected.
6. The installation location must be out of the reach of children and avoid locations that are easy to touch. The surface may be hot when the device is running to prevent burns.
7. The equipment must be installed at a height convenient for operation and maintenance, ensuring that the equipment indicators and all labels are easy to view, and the wiring terminals are easy to operate.
8. The inverter installation altitude must be lower than the Max. Operating Altitude of 4000 m.
9. Installing the inverter in salt-damage areas will cause corrosion. Salt-damage areas refer to areas within 1000 m of the coast or affected by sea breeze. Areas affected by sea breeze vary depending on meteorological conditions (e.g., typhoons, monsoon winds) or terrain (presence of dikes, hills).
10. Keep away from strong magnetic field environments to avoid electromagnetic interference. If there is a radio station or wireless communication equipment below 30 MHz near the installation location, install the device according to the following requirements:

- Add a ferrite core with multiple winding turns at the inverter's DC input line or AC output line, or add a low-pass EMI filter.
- The distance between the inverter and wireless electromagnetic interference

equipment shall exceed 30 m.

Installation Carrier Requirements

- The Mounting Support must not be made of flammable materials and must have fireproof performance.
- Please ensure the installation surface is sturdy and the carrier meets the load-bearing requirements of the device.
- During operation, the device generates vibration. Do not install it on a carrier with poor sound insulation, to avoid the Noise Emission generated by the device during operation disturbing residents in living areas.

Installation Angle Requirements

- Recommended Installation Angle for the inverter: vertical or backward tilt ≤ 15°.
- Do not install the inverter upside down, tilted forward, tilted backward beyond the angle, or horizontally.

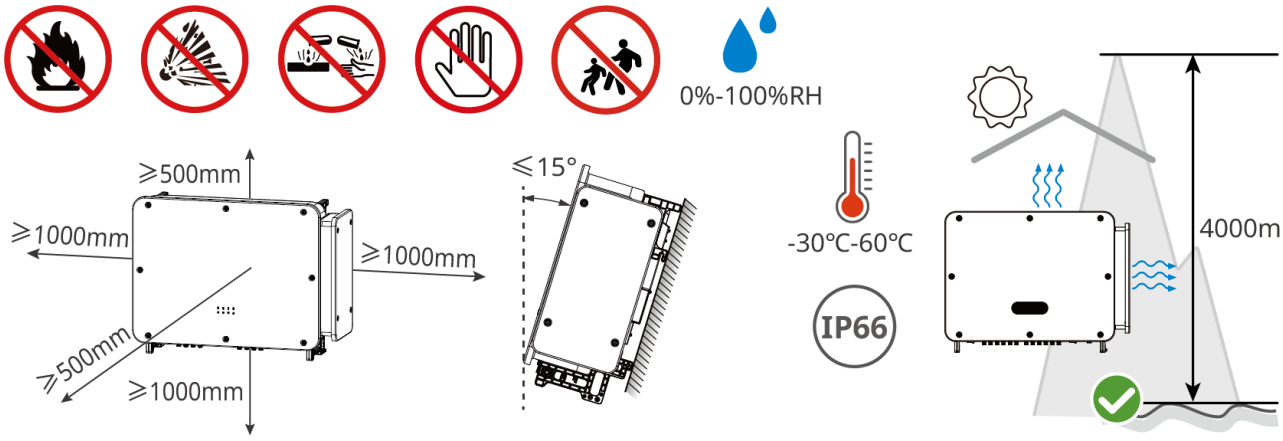

GT10INT0007

Installation Tool Requirements

During installation, it is recommended to use the following installation tools. If necessary, other auxiliary tools can be used on site.

Tool Type	Description	Tool Type	Description

	Insulating gloves, protective gloves	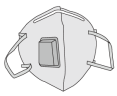	Dust mask
	Safety goggles		Safety Shoes
	Torque Wrench	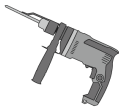	Impact Drill
	Diagonal Pliers		Heat Gun
	Wire Stripper	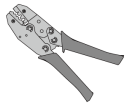	Terminal Crimping Pliers
	Rubber Mallet		Marker
	Multimeter	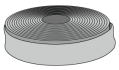	Heat-shrink tubing
	Vacuum Cleaner		Spirit Level
	Open-end Wrench		JinkoSolar DC Unlocking Tool

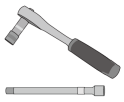	Socket Tool		

4.2 Installing the Inverter

4.2.1 Moving the Inverter

⚠CAUTION

Before installation, the inverter must be transported to the installation site. To avoid personal injury or equipment damage during transport, observe the following precautions:

1. Please assign corresponding personnel according to the equipment Weight to prevent the equipment from exceeding the human-carryable Weight range and causing personal injury.
2. Wear safety gloves to avoid injury.
3. Ensure the equipment remains balanced during handling to avoid dropping.

4.2.2 Installing the Inverter

NOTICE

- When drilling, ensure that the drilling positions avoid water pipes, cables, etc. inside the wall to prevent hazards.
- When drilling, wear safety goggles and a dust mask to prevent dust from being inhaled into the respiratory tract or entering the eyes.
- Ensure that the drilling positions avoid water pipes, cables, etc. inside the wall to prevent hazards.
- If you need to use a bracket to mount the inverter, prepare the bracket yourself and secure it properly.
- If you need to use a handle or lifting ring, please contact the after-sales service center to purchase one.
- The graphics and appearance in this document are for reference only. Appearance may differ between different models or different versions of the same model; please refer to the actual product.

Step 1: Place the backplate horizontally on the wall or bracket, and use a marking pen to mark the drilling positions.
Step 2: Use an impact drill with a drill bit diameter of 10 mm to drill holes, ensuring a hole depth of approximately 80 mm.
Step 3: Use expansion screws to secure the backplate to the wall or bracket.
Step 4: Install the handles or lifting rings on both sides of the inverter. Installation personnel should carry the inverter by hand using the handles or lift it, and hang the inverter on the back mounting bracket.
Step 5 : Secure the back mounting bracket and the inverter to ensure the inverter is installed firmly.

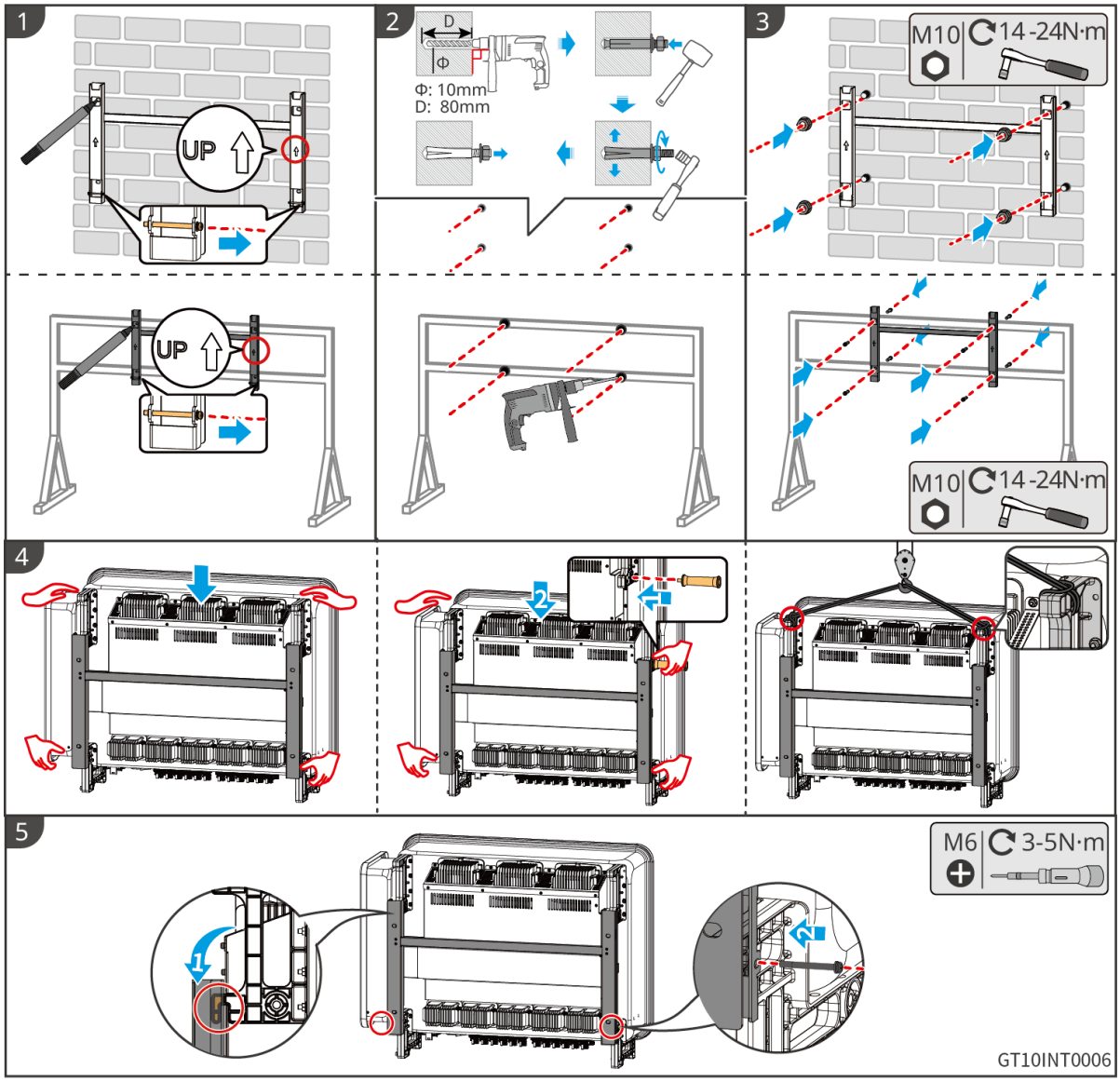
1
UP
2
D
Φ
Φ: 10mm
D: 80mm
3
M10
14-24N·m
UP
M10
14-24N·m
4
2
5
M6
3-5N·m
1
2
GT10INT0006

5 Electrical Connection

5.1 Safety Precautions

⚠DANGER

- Before performing electrical connections, disconnect the inverter's DC Switch and AC output switch to ensure the equipment is de-energized. Live working is strictly prohibited; otherwise, hazards such as electric shock may occur.
- All operations during the electrical connection process and the specifications of the cables and components used must comply with local laws and regulations.
- If the cable is subjected to excessive tension, it may cause poor connection. During wiring, reserve a certain length of cable before connecting it to the inverter terminals.

NOTICE

- When performing electrical connections, wear personal protective equipment such as safety shoes, protective gloves, and insulating gloves as required.
- Only professionals are permitted to perform operations related to electrical connections.
- The cable colors in the figures in this document are for reference only. Specific cable specifications must comply with local regulatory requirements.
- The graphics and appearance in this document are for reference only. Appearance may differ between different models or different versions of the same model; please refer to the actual product.

Cable specification requirements

Cable	Type	Cable specifications	
		Diameter	Conductor cross-sectional area (mm^2)

DC cable	PV cable compliant with the 1100V standard	4.7 - 6.4	Recommended: 4~6	
AC cable	Outdoor single-core multi-stranded copper/aluminum wire[1]	14~34	S_{AC}: Copper core: 95-400	S_{AC}: Aluminum core: 120-400
	Outdoor multi-core multi-stranded copper/aluminum wire[1]	22~66	S_{AC}: Copper conductor: 95-240	S_{AC}: Aluminum conductor: 120-240
Protection ground wire	Outdoor cable	S_{PE}1/2 S_{AC}		
Communication cable	Outdoor shielded twisted pair cable meeting local standards[2]	4~6	0.2~0.5	

Note: [1] When using aluminum wires, connect copper-aluminum transition terminals.
[2] The total length of communication cables shall not exceed 1000 m.
[3] The values in this table are valid only when the external Protection Earthing Conductor uses the same metal as the phase conductor. Otherwise, the cross-sectional area of the external Protection Earthing Conductor shall be such that its conductivity is equivalent to that specified in this table.

5.2 Connect Protection Grounding Cable

⚠WARNING

- The Protection grounding of the enclosure cannot replace the Protection ground cable of the AC output port. When wiring, ensure that the Protection ground cables at both locations are reliably connected.
- If there are multiple inverters, ensure equipotential bonding of the Protection grounding points of all inverter enclosure shells.
- To improve the corrosion resistance of the terminals, after the Protection ground cable connection is installed, it is recommended to apply silicone or paint to the exterior of the grounding terminal for protection.
- Please provide your own Protection ground cables and wiring terminals according to the recommended specifications.
  Ground cables of other sizes that comply with local standards and safety regulations can also be used for grounding connections. However, any damage caused thereby is not within the responsibility of the equipment manufacturer.

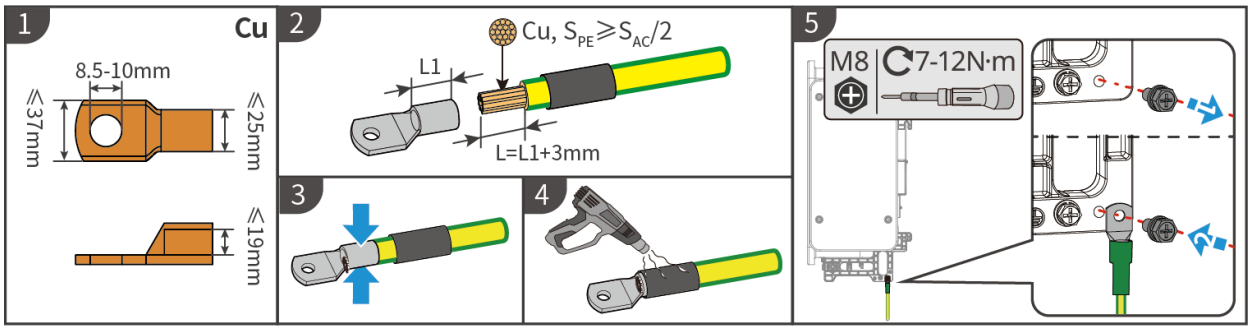

GT10ELC0008

5.3 Connect AC Output Cables

WARNING

- It is prohibited to connect a load between the inverter and the AC Switch directly connected to the inverter.
- The inverter has an integrated Residual Current Monitoring Unit (RCMU). When the inverter detects a leakage current greater than the allowable value, it will quickly disconnect from the grid.

Whether to install an RCD (Residual Current Monitoring Device) shall be determined according to local laws and regulations. The inverter can be connected to an external Type A RCD to provide Protection when the DC component of the leakage current

exceeds the limit. The following RCD specifications are for reference:

Inverter model	RCD specifications
GW150K-GT-G10	1500mA
GW100K-GT-L-G10	1000mA

NOTICE

Each inverter must be equipped with an AC output switch. Multiple inverters must not be connected to the same AC Switch at the same time.

To ensure that the inverter can be safely disconnected from the grid in the event of an abnormal situation, connect an AC Switch on the AC side of the inverter. Select an appropriate AC Switch according to local regulations. The following switch specifications are for reference:

Inverter model	AC Switch specifications
GW150K-GT-G10	315A/400V
GW100K-GT-L-G10	

⚠WARNING

- During wiring, the AC output cable must match the 'L1', 'L2', 'L3', 'N', and 'PE' ports of the AC terminal exactly. Incorrect cable connection will cause inverter damage.
- Ensure that the conductor cores are fully inserted into the wiring holes of the AC terminal with no exposed parts.
- Ensure that the cables are securely connected; otherwise, during equipment operation, the terminals may overheat and cause inverter damage.
- The AC output terminals support three-phase four-wire and three-phase five-wire wiring configurations. The actual wiring scenario shall prevail. This document uses the three-phase five-wire system as an example for description.
- A length allowance should be reserved for the Protection ground cable, so that when the AC output cable is subjected to tension due to force majeure, the Protection ground cable is the last to bear stress.
- The waterproof silicone pads for the AC cable outlet holes are supplied with the inverter and are located in the inverter AC junction box. Select the corresponding hole positions on the silicone pad according to the actual cable specifications used.
- Please provide your own AC wiring OT terminals.
- When using aluminum cables, connect copper-aluminum transition terminals.

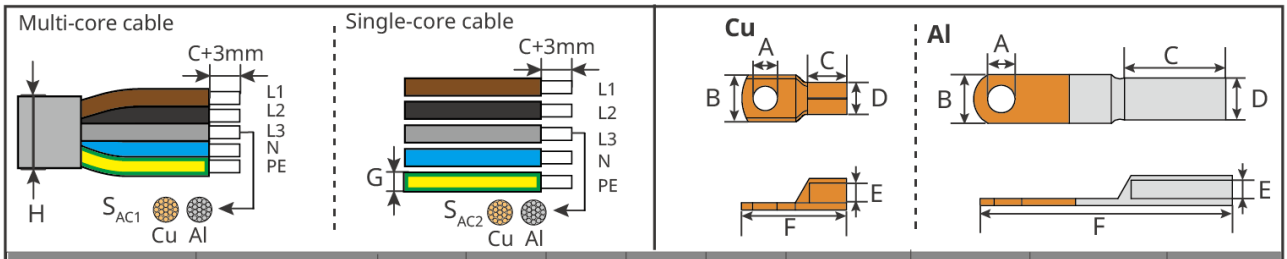

Cable Material	Cable Type	A (mm)	B (mm)	D (mm)	E (mm)	F (mm)	G (mm)	H (mm)	S_{AC1} (mm^2)	S_{AC2} (mm^2)
Cu	**L1/L2/L3**	12.5-14	⩽50	⩽34	⩽27	⩽170	Φ:14-34	Φ:22-66	95-240	95-400
	N	12.5-14	⩽37	⩽25	⩽19	-			$S_{AC1}/2$	$S_{AC2}/2$
	PE	8.5-10								
Al	**L1/L2/L3**	12.5-14	⩽50	⩽38	⩽27	⩽170	Φ:14-34	Φ:22-66	120-240	120-400
	N	12.5-14	⩽37	⩽27	⩽19	⩽133			$S_{AC1}/2$	$S_{AC2}/2$

GT10ELC0014

Step 1: Remove the AC wiring cover.

Step 2: Remove the nut and silicone gasket.

Step 3: Select the corresponding hole diameter according to the AC cable diameter

specification, and cut out the cable entry hole in the silicone gasket.

Step 4: Route the cable through the silicone gasket.

Step 5: Crimp the AC cable OT terminal to make the AC output cable.

Step 6: Secure the AC cable to the inverter.

Step 7: Fasten the AC wiring cover.

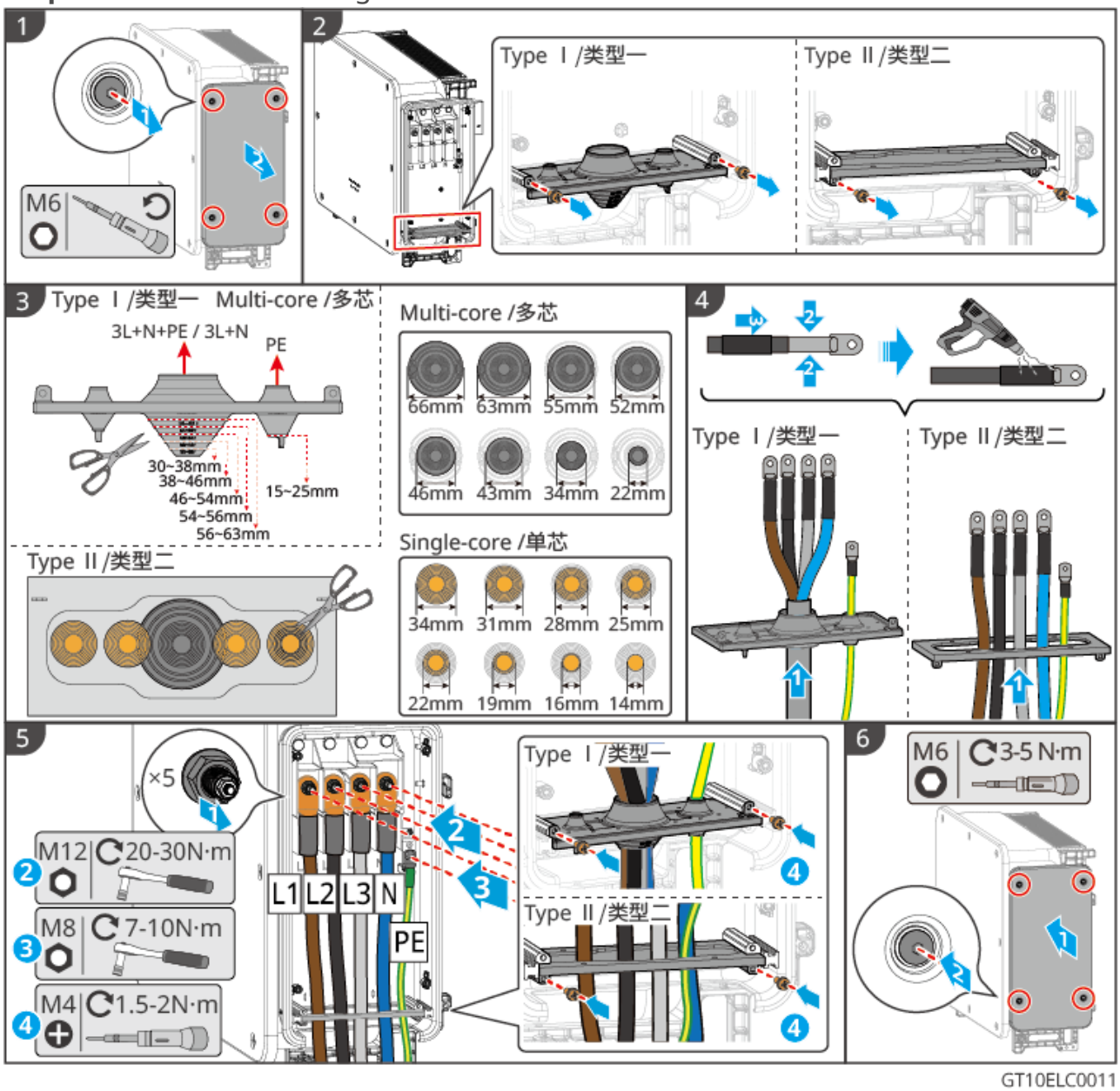

5.4 Connect DC Input Cables

DANGER

1. Do not connect the same PV string to multiple inverters; otherwise, the inverter may be damaged.
2. The PV string output does not support grounding. Before connecting the PV string to the inverter, ensure that the minimum insulation resistance to ground of the PV string meets the minimum insulation impedance requirement.
3. Please use the DC Connector supplied with the box to connect the inverter DC cables.
4. Before connecting the PV strings to the inverter, confirm the following information; otherwise, the inverter may be permanently damaged, and in severe cases, a fire may occur, causing personal injury and property loss. Damage or injury caused by failure to operate in accordance with this document or the corresponding user manual is not covered by the warranty.

- Ensure that the positive pole of the PV string is connected to the PV+ of the inverter, and the negative pole of the PV string is connected to the PV- of the inverter.
- Please ensure that the open-circuit voltage of the PV strings connected to each MPPT does not exceed 1100 V. When the input voltage is 1000 V - 1100 V, the inverter enters standby mode. When the voltage recovers to 180 V - 1000 V, the inverter will resume normal operation.

⚠WARNING

- PV strings connected to the same MPPT must use the same model and the same number of PV modules.
- To maximize the inverter's power generation Efficiency, ensure that the Maximum Power Point Voltage of the series-connected PV modules is within the inverter's MPPT full-load Voltage Range.
- Please ensure that the voltage difference between different MPPT channels is less than or equal to 150 V.
  Please ensure that the input current of each MPPT is less than or equal to the inverter's Max. MPPT Current, see technical data.
- When multiple PV strings are connected to the inverter, the number of connected MPPTs must be maximized.

PV String Connection Method

NOTICE
To achieve optimal power generation, it is recommended to connect PV strings as follows.

When the number of PV strings is ≤10, connect the PV strings to the inverter sequentially from MPPT1 to MPPT10.

When the number of PV strings is >10, please connect the PV strings to the inverter according to the table below

●: Connect onePV string

●●: Connect two PV strings

Number of PV Strings	MPPT 1	MPPT 2	MPPT 3	MPPT 4	MPPT 5	MPPT 6	MPPT 7	MPPT 8	MPPT 9	MPPT 10
11	●●	●	●	●	●	●	●	●	●	●
12	●●	●●	●	●	●	●	●	●	●	●
13	●●	●●	●●	●	●	●	●	●	●	●
14	●●	●●	●●	●●	●	●	●	●	●	●
15	●●	●●	●●	●●	●	●	●●	●	●	●
16	●●	●●	●●	●●	●	●	●●	●●	●	●
17	●●	●●	●●	●●	●	●	●●	●●	●	●●
18	●●	●●	●●	●●	●	●	●●	●●	●●	●●
19	●●	●●	●●	●●	●●	●	●●	●●	●●	●●
20	●●	●●	●●	●●	●●	●●	●●	●●	●●	●●

NOTICE
If the DC input terminals of the inverter do not need to be connected to PV strings, use waterproof covers to seal the terminals; otherwise, the Ingress Protection Rating of the equipment will be affected.

Step 1: Prepare the DC cables.

Step 2: Disassemble the DC Connector. Crimp the DC terminal and assemble the DC Connector.

Step 3: Tighten the DC Connector.

Step 4: Check the DC input voltage.

Step 5: Connect the DC Connector to the inverter DC terminals.

Type 1:

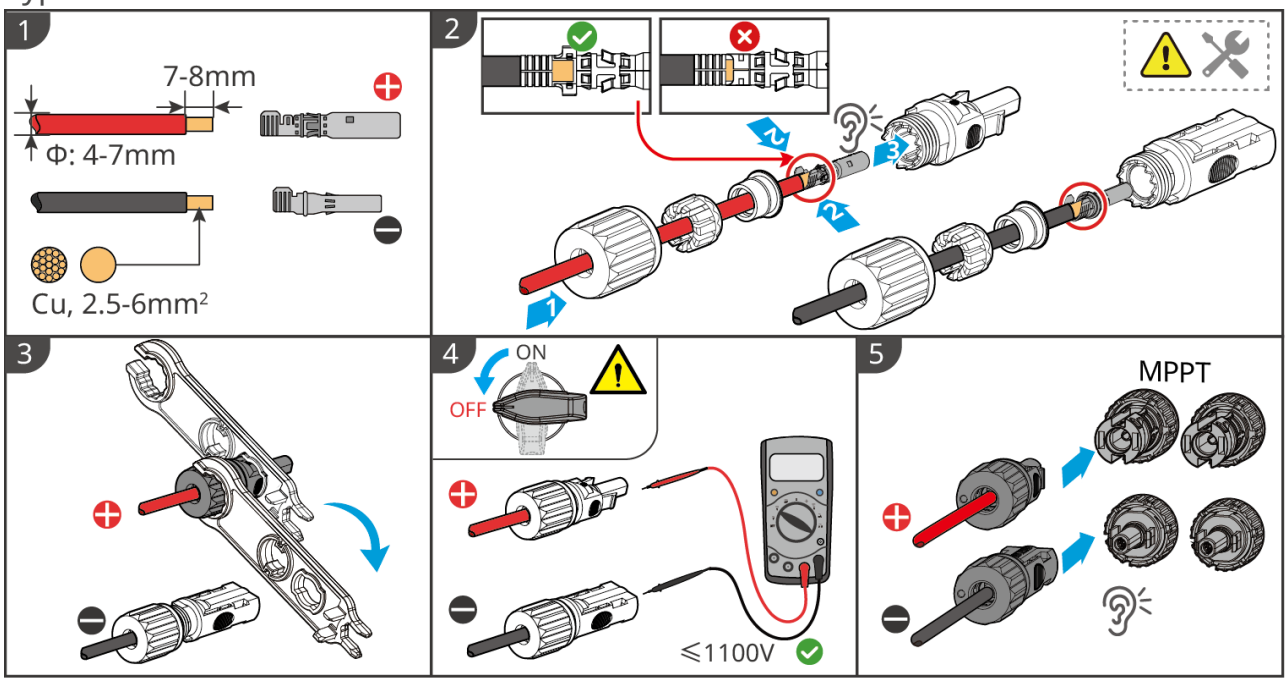

GT10ELC0010

Type 2:

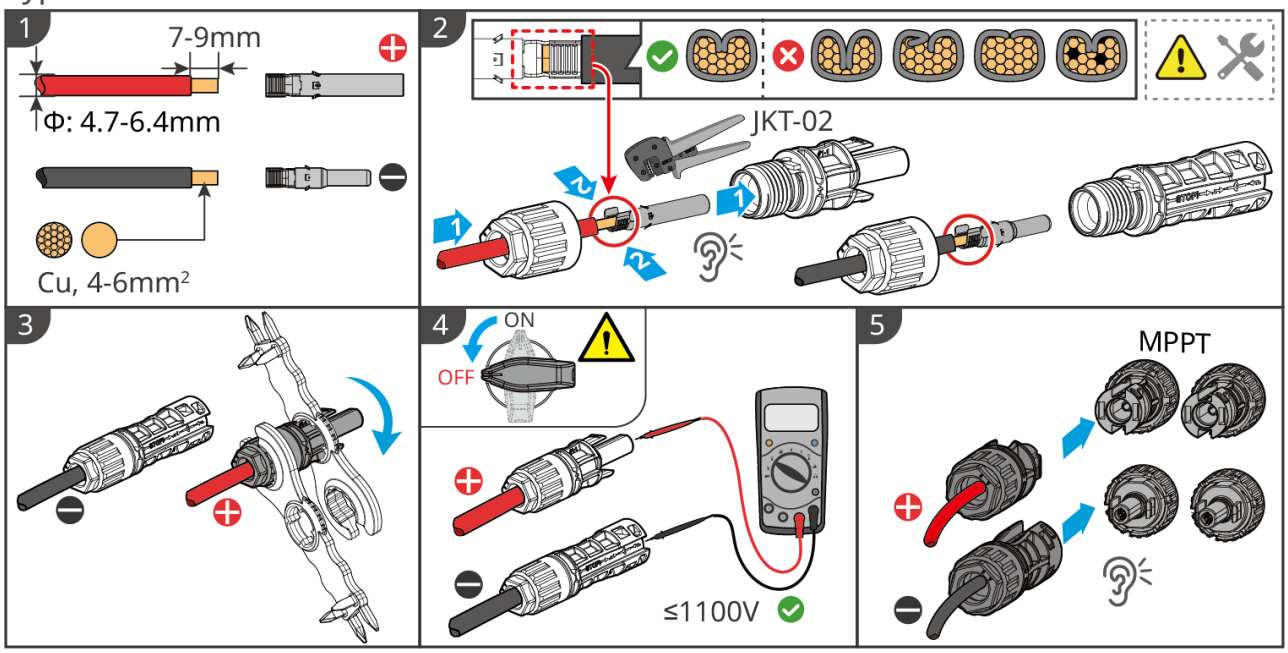

GT10ELC0009

Connect Y-type PVconnector (optional)

NOTICE

1. If a Y terminal is required, ensure that the DC Connector model of the Y terminal is the same as the specifications of the inverter's PV input terminals. Equipment damage caused by using incompatible Y terminals is not covered by the equipment manufacturer's warranty.
2. Ensure that all PV strings connected to one MPPT via Y-type terminals have the same configuration, including model, quantity, tilt angle, and azimuth.
3. The total current of strings connected via Y-type terminals must be less than the Max. Current per PV channel.

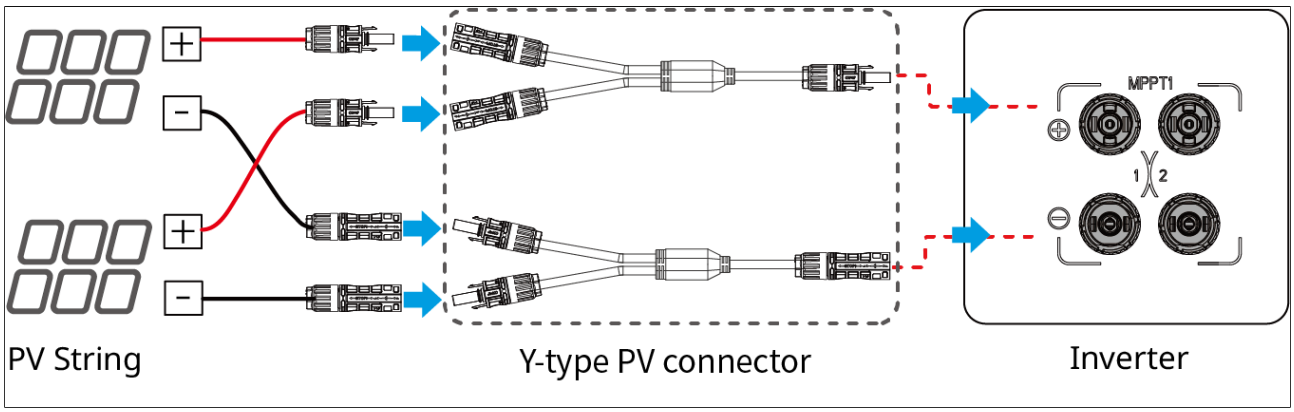

5.5 Communication Connection

- The inverter supports connection via RS485 signals to other inverters, meters, data loggers (EzLogger3000C), smart communication boxes (SEC3000/SEC3000C), and other devices, enabling functions such as Parallel Networking, grid-connected power limiting, and nighttime power supply.
- The inverter supports connection to a mobile phone or Web interface via a smart communication stick for setting device-related parameters, viewing device operating information and error information, and uploading system operating information to the monitoring platform to facilitate timely understanding of system status.

5.5.1 RS485 Communication Networking Solution

NOTICE

- When using a data logger to network multiple inverters via RS485, multiple inverters can be connected to each COM port of the data logger. When using EzLogger3000C, a maximum of 20 inverters can be connected to each COM port; when using SEC3000/SEC3000C, a maximum of 20 inverters can be connected to each COM port. The total length of RS485 cables for each COM port must not exceed 1000 m.
- When multiple inverters are operated in parallel, to ensure normal communication, configure as follows according to the parallel operation scheme:
  Smart Data Logger / Smart Energy Control Box: Set the terminating resistor DIP switch of the last inverter to ON
  Ezlink3000: Set the terminating resistor DIP switches of both the first and last inverters to ON

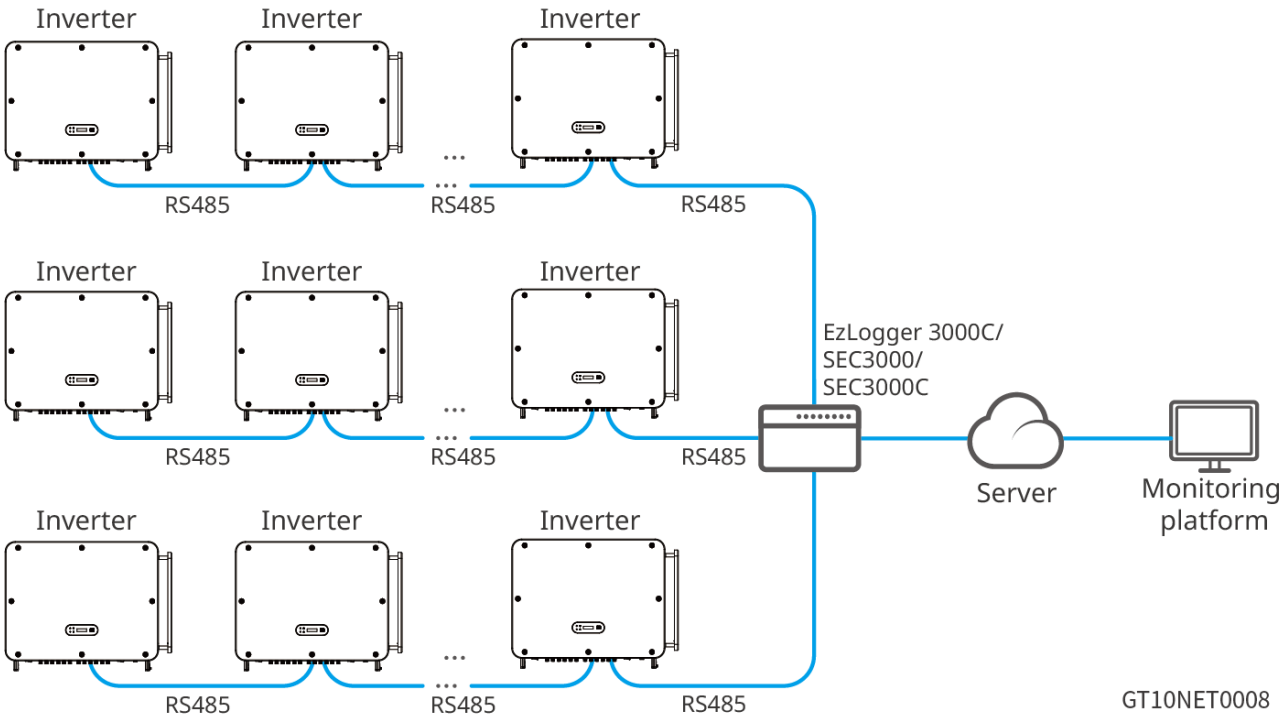

5.5.2 Grid-Tied Power Limitation

When the PV plant Energy Generation is for Self-consumption and the power-consuming equipment cannot consume all the energy, and the energy needs to be fed into the grid, the smart meter, smart data logger, smart energy controller SEC3000/SEC3000Cor smart communication stick Ezlink 3000 can be used to monitor the PV plant Energy Generation and control the Energy Generation fed into the grid.

⚠WARNING

1. The CT installation position should be close to the grid-connection point, and the installation direction must be correct. The --> symbol in the CT indicates the direction of inverter current flowing to the grid. If reversed, the inverter will trigger an alarm and the Power Limit function cannot be realized.
2. The CT aperture must be larger than the outer diameter of the AC power line to ensure that the AC power line can pass through the CT.
3. For the specific CT wiring method, refer to the corresponding manufacturer's documentation to ensure correct wiring direction and normal function.
4. The CT must be clamped onto the L1, L2, and L3 cables. Do not clamp it onto the N cable.
5. CT Specification Requirements:
   - For the CT current transformation ratio specification, select nA/5A. (nA: CT primary-side input current; n ranges from 200 to 5000 and is selected by the user according to actual requirements. 5A: CT secondary-side output current.)
   - For the CT accuracy class, 0.5, 0.5s, 0.2, and 0.2s are recommended to ensure that the CT current sampling error is ≤1%.
6. To ensure CT current detection accuracy, the CT cable length is recommended not to exceed 30 m, and the cable current-carrying capacity is recommended to be 6 A.

NOTICE

1. Ensure that the meter wiring and phase sequence are correct. Recommended cross-sectional area of the meter input voltage cable: 1 mm^2 (18 AWG).
2. Only applicable to GM330:

- The external CT ratio can be set through the SolarGo App. For example, if a 200A/5A CT is selected, the CT ratio must be set to 40.
- If the networking scenario is three-phase three-wire, the N line and L2 line on the meter side must be short-circuited.
- For detailed setting information, refer to: SolarGo App User Manual.

Single-unit Power LimitNetworking Solution (GM330)

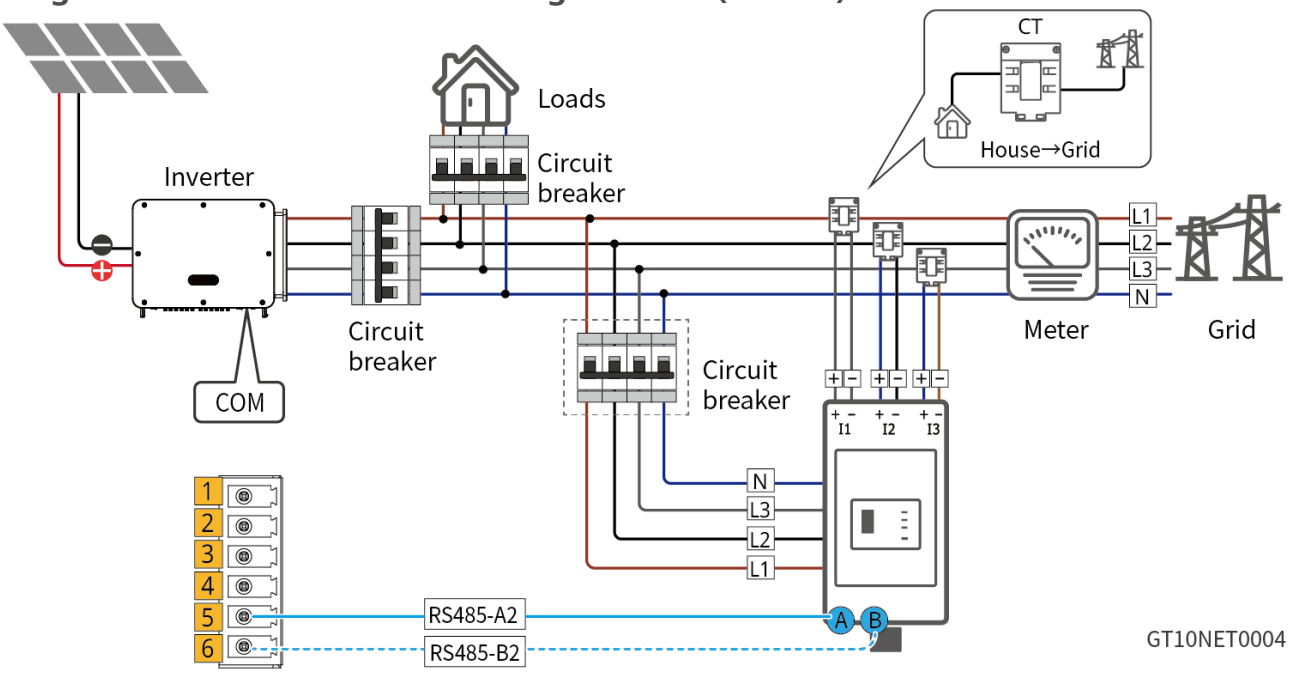

Multi-inverter Power Limit Networking Solution (EzLogger3000C+GM330)

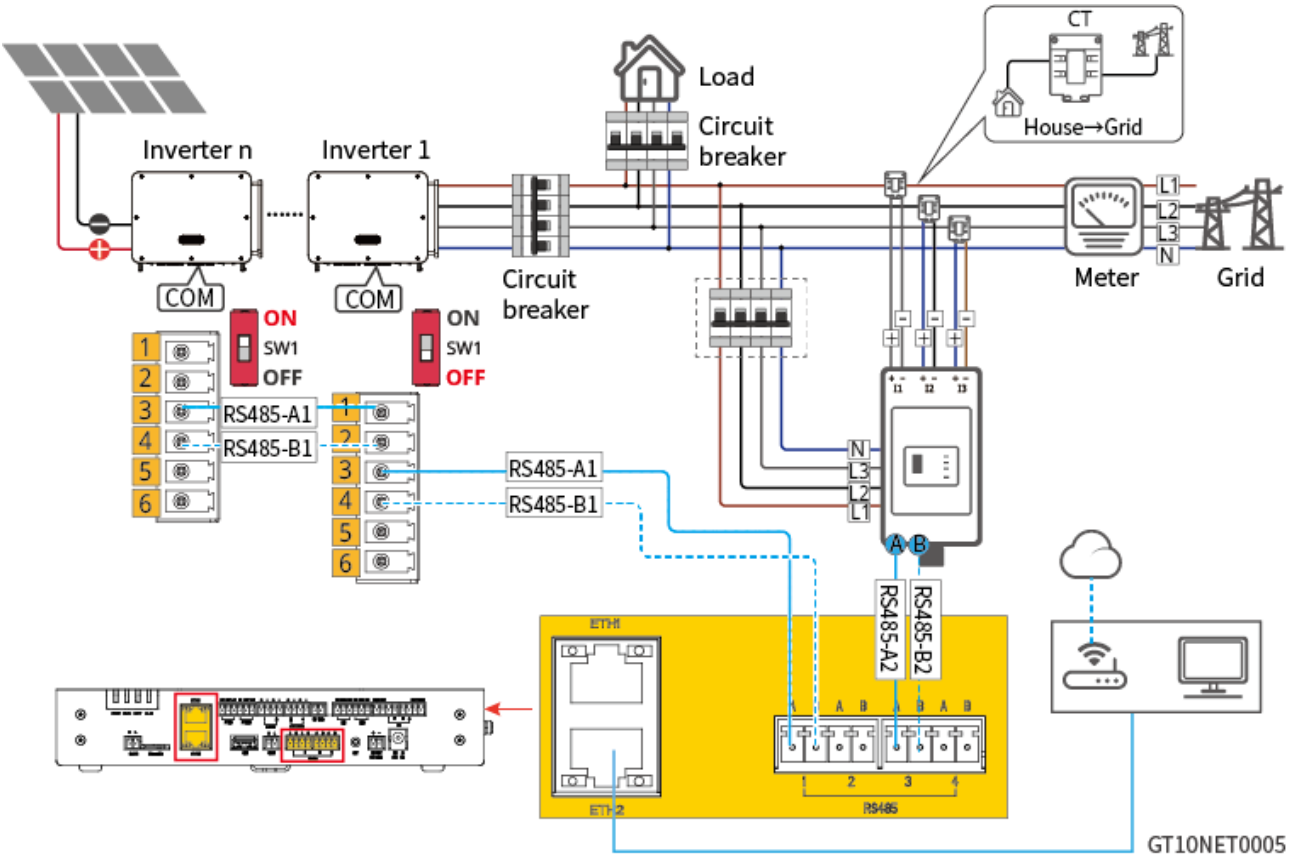

Multi-inverter Power Limit Networking Solution (SEC3000/SEC3000C)

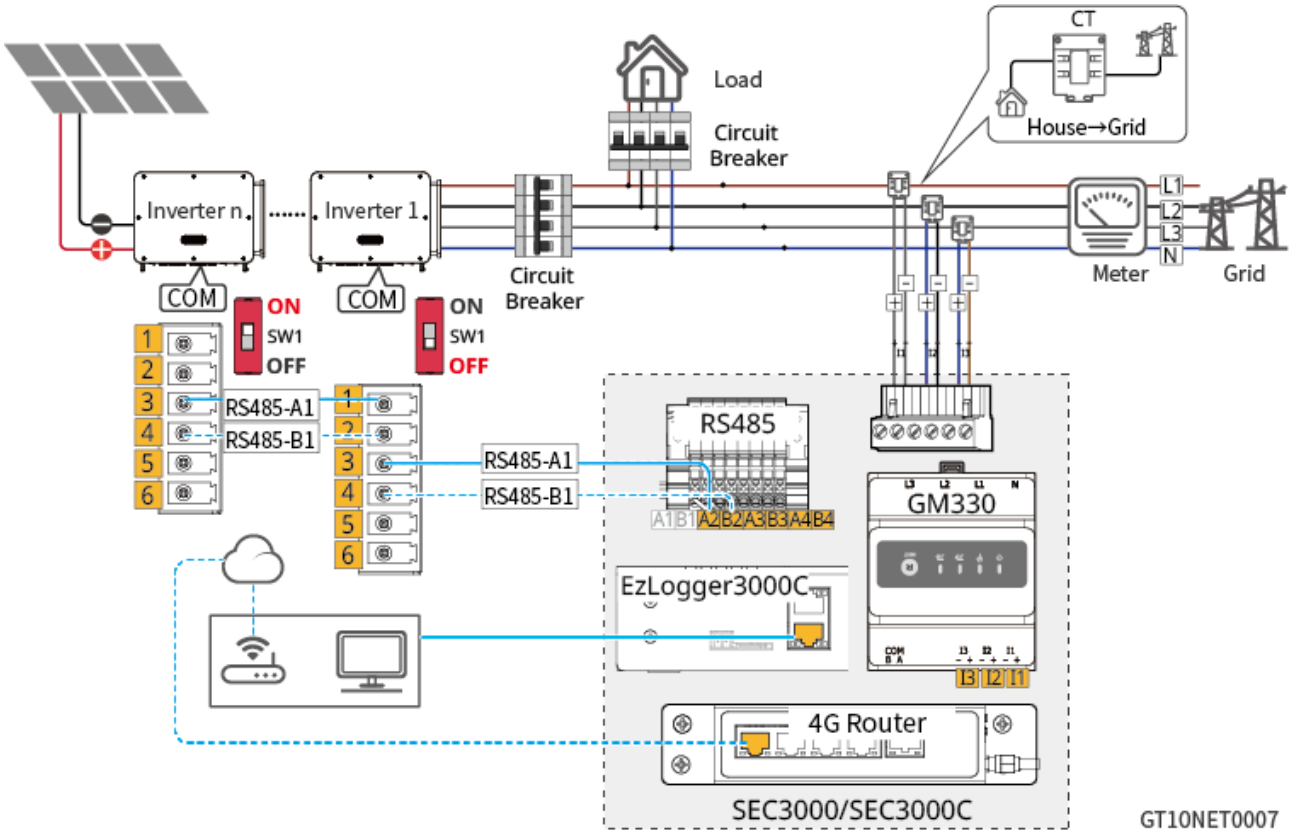

Multi-inverter Power Limitation Networking Solution (Ezlink3000)

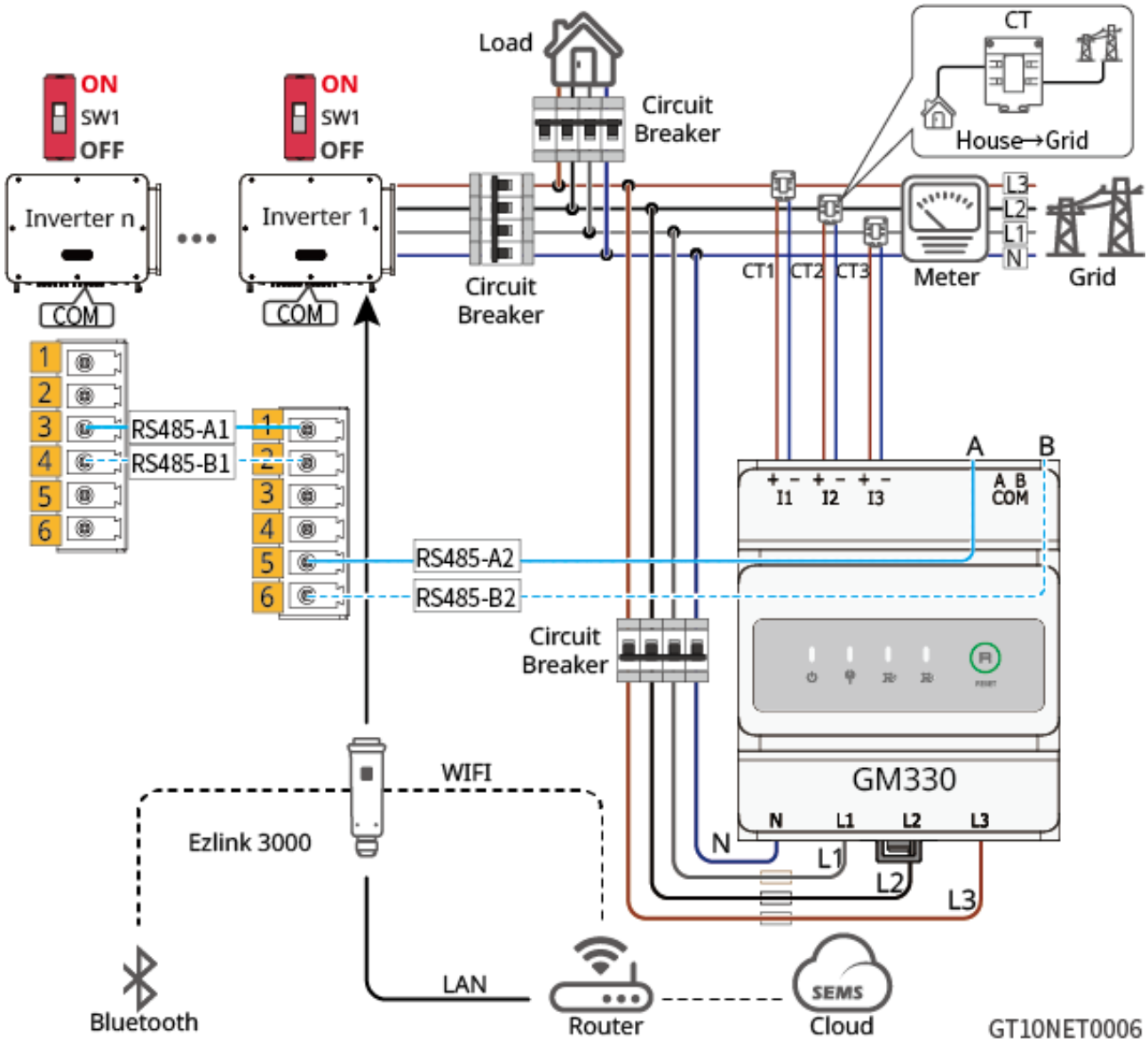

5.5.3 Connect Communication Cables

NOTICE

- When connecting communication cables, ensure that the wiring port definitions match the device exactly. Route cables away from interference sources, power lines, etc., to avoid affecting signal reception.
- The Remote Shutdown and EPO functions are disabled by default. If they are required, enable them via the SolarGo App. For details, refer to the SolarGo APP User Manual.
- When multiple inverters are operated in parallel, to ensure normal communication, configure as follows according to the parallel operation scheme:
  Smart Data Logger / Smart Energy Control Box: Set the terminating resistor DIP switch of the last inverter to ON
  Ezlink3000: Set the terminating resistor DIP switches of both the first and last inverters to ON

Communication port

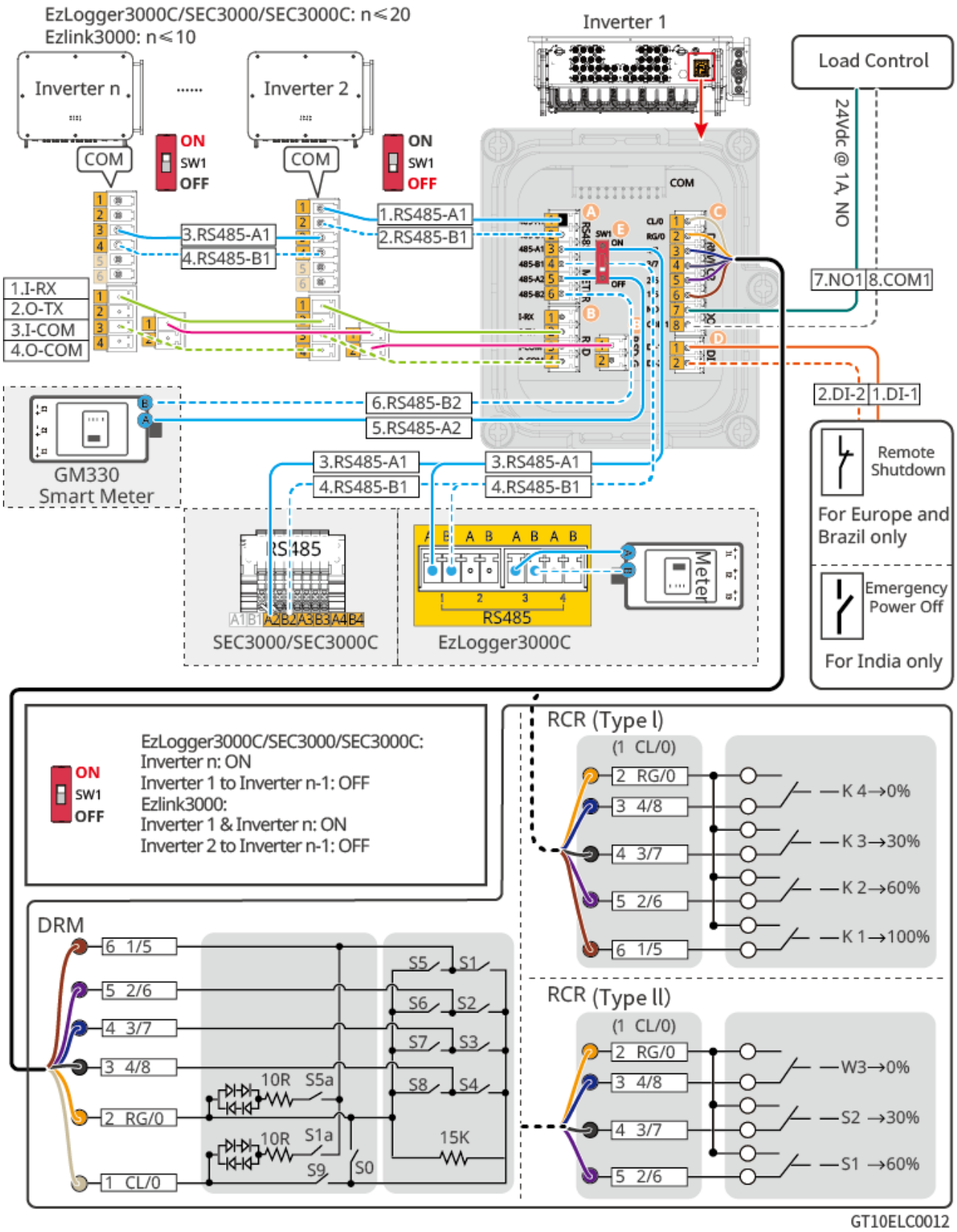
EzLogger3000C/SEC3000/SEC3000C: n≤20
Ezlink3000: n≤10
Inverter n
Inverter 2
Inverter 1
COM
ON
SW1
OFF
1.RS485-A1
2.RS485-B1
3.RS485-A1
4.RS485-B1
1.I-RX
2.O-TX
3.I-COM
4.O-COM
Load Control
24Vdc @ 1A, NO
7.NO1
8.COM1
2.DI-2
1.DI-1
6.RS485-B2
5.RS485-A2
GM330
Smart Meter
Remote Shutdown
For Europe and Brazil only
Emergency Power Off
For India only
RS485
SEC3000/SEC3000C
EzLogger3000C
Meter
EzLogger3000C/SEC3000/SEC3000C:
Inverter n: ON
Inverter 1 to Inverter n-1: OFF
Ezlink3000:
Inverter 1 & Inverter n: ON
Inverter 2 to Inverter n-1: OFF
DRM
6 1/5
5 2/6
4 3/7
3 4/8
2 RG/0
1 CL/0
10R
S5a
S1a
S9
S0
S5
S1
S6
S2
S7
S3
S8
S4
15K
RCR (Type I)
(1 CL/0)
K 4→0%
K 3→30%
K 2→60%
K 1→100%
RCR (Type II)
W3→0%
S2 →30%
S1 →60%
GT10ELC0012

Function	Area	No.	Port Name	Description
RS485	A	1	RS485-A1	Used for communication with multiple inverters, data loggers, and smart communication boxes.
		2	RS485-B1	
		3	RS485-A1	
		4	RS485-B1	
		5	RS485-A2	Used for communication with smart meters.
		6	RS485-B2	
RSD (Rapid Shutdown)	B	1	I-RX	Used for parallel communication between multiple inverters when implementing the RSD function.
		2	O-TX	
		3	I-COM	
		4	O-COM	
		1	RSD-GND	
		2	RSD-GND	
DRM/RCR	C	1	CL/0	Connect to DRED devices (Australia only) or RCR devices (Europe only).
		2	RG/0	
		3	4/8	
		4	3/7	
		5	2/6	
		6	1/5	
Dry contact		7	NO1	Used to control the start of the Diesel Generator. The DO contact rating is 24 VDC@1A, NO normally open contact.
		8	COM1	
Remote Shutdown	D	1	DI-1	

		2	DI-2	Connect to the Remote Shutdown device (Europe or Brazil models only) and the Emergency Power Off device (India only).

Communication Wiring

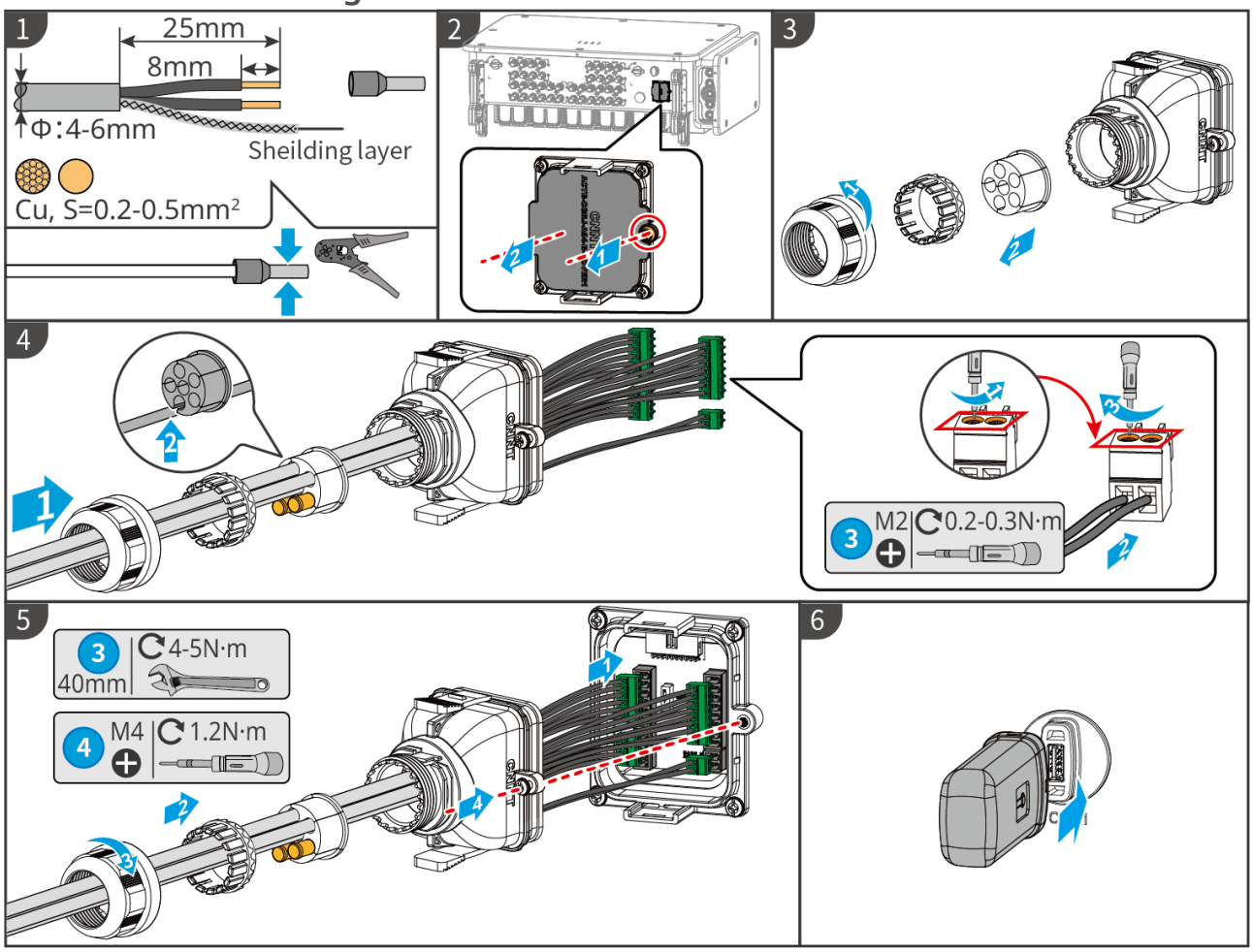

GT10ELC0013

6 Equipment Commissioning

6.1 Pre-Power-on Check

No.	Check Item
1	The inverter is installed securely, the installation position is convenient for operation and maintenance, the installation space facilitates ventilation and heat dissipation, and the installation environment is clean and tidy.
2	The Protection ground wire, DC input cables, AC output cables, and communication cables are connected correctly and securely.
3	Cables are bound in accordance with routing requirements, reasonably distributed, and free from damage.
4	Unused ports are sealed.
5	The voltage and frequency at the inverter grid-connection point meet the grid-connection requirements.

6.2 Powering on the Device

Step 1: Close the AC Switch between the inverter and the grid.
Step 2: Close the DC Switch of the inverter.

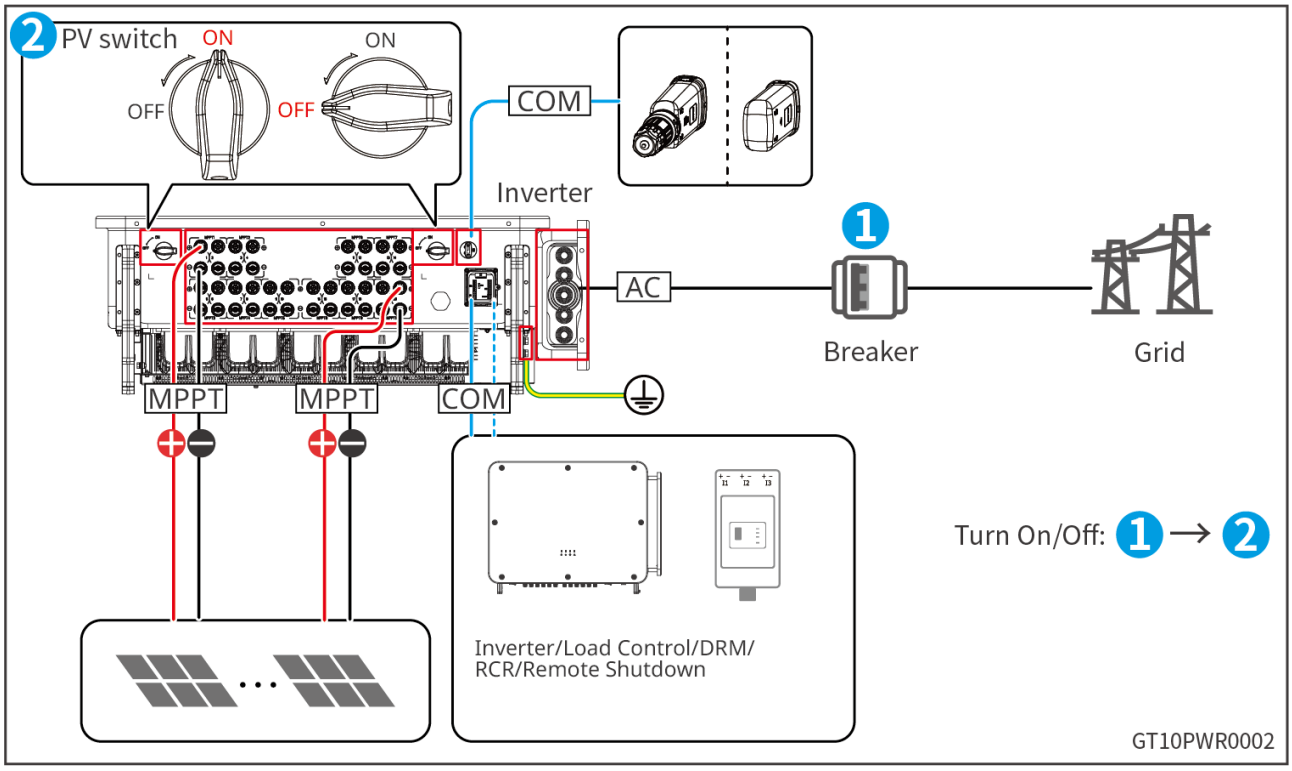
2
PV switch
ON
OFF
ON
OFF
COM
Inverter
1
AC
Breaker
Grid
MPPT
MPPT
COM
Inverter/Load Control/DRM/
RCR/Remote Shutdown
Turn On/Off: 1 → 2
GT10PWR0002

7 System Commissioning

7.1 Setting Inverter Parameters via App

SolarGo App is a mobile application that can communicate with the inverter via Bluetooth and Wi-Fi. The common functions are as follows:

1. View the inverter's operating data, software version, alarm information, etc.
2. Set the inverter's grid parameters, communication parameters, etc.
3. Maintain devices.

For detailed functions, refer to the SolarGo App User Manual. The user manual can be obtained from the official website or by scanning the QR code below.

SolarGo App

SolarGo App User Manual

7.2 Plant Monitoring via SEMS+

SEMS+ is a monitoring platform that can communicate with devices via WiFi, LAN, or 4G. The following are common functions of SEMS+:

1. Manage organization or user information, etc.
2. Add and monitor plant information, etc.
3. Maintain devices.

Scan the QR code below to download and install.

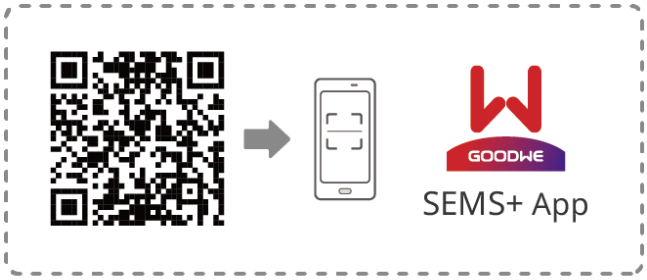

SEMS0164

For detailed functions, please refer to the SEMS+ User Manual. The user manual can be obtained from the official website or by scanning the following QR code.

8 System Maintenance

8.1 Powering off the Inverter

⚠DANGER

- When performing operation and maintenance on the inverter, please power off the inverter. Operating the equipment with power on may cause inverter damage or electric shock hazard.
- After the inverter is powered off, the internal components require a certain amount of time to discharge. Please wait according to the time requirement on the label until the equipment is fully discharged.

Step 1: Disconnect the AC Switch between the inverter and the power grid.

Step 2: Disconnect the DC Switch of the inverter.

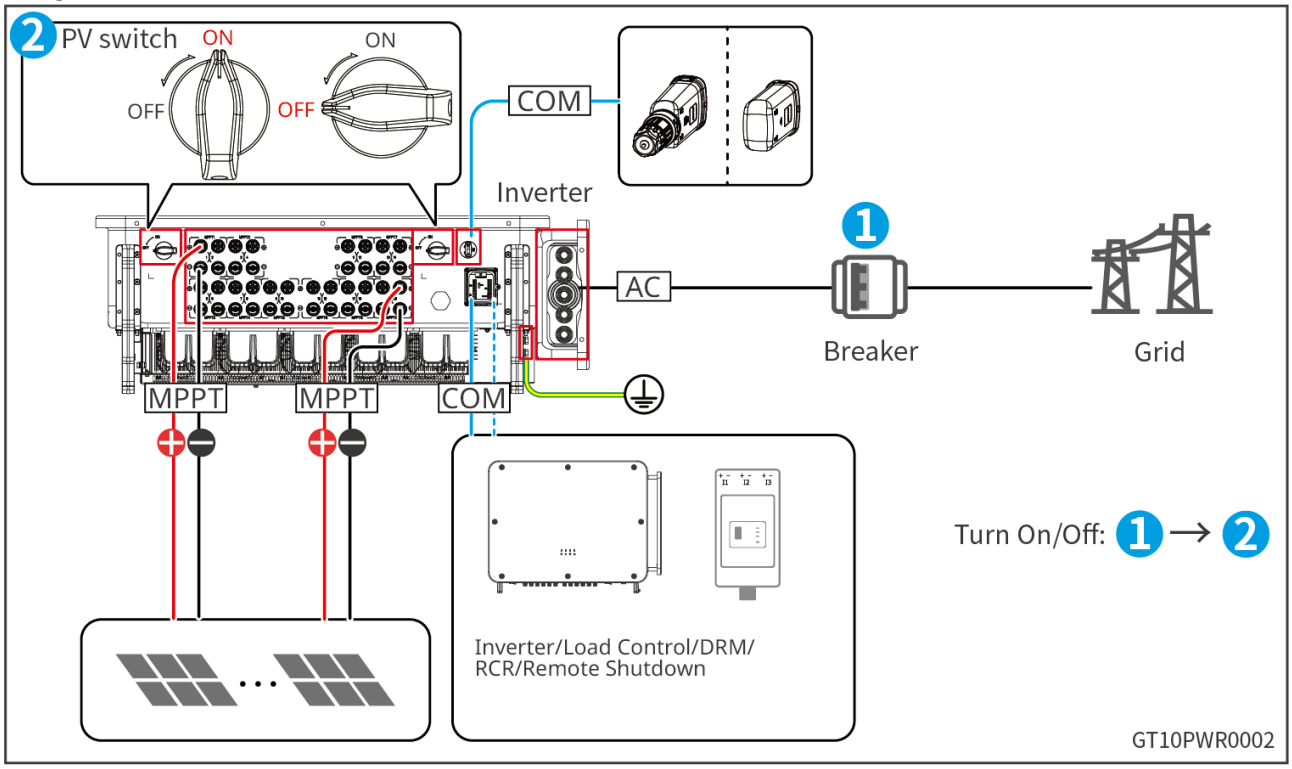

8.2 Remove the Inverter

⚠WARNING

- Ensure that the inverter is powered off.
- When operating the inverter, please wear personal protective equipment.

Step 1: Disconnect all electrical connections of the inverter, including: DC cable, AC cable, communication cable, communication module, Protection ground wire.
Step 2: Remove the inverter from the backplate.
Step 3: Remove the backplate.
Step 4: Properly store the inverter. If the inverter needs to be put into use later, ensure that the storage conditions meet the requirements.

8.3 Scrap the Inverter

When the inverter cannot continue to be used and needs to be scrapped, please dispose of the inverter in accordance with the electrical waste disposal requirements of the laws and regulations of the country/region where the inverter is located. The inverter must not be treated as household waste.

8.4 Troubleshooting

Please troubleshoot according to the following methods. If the troubleshooting methods do not help you, please contact the after-sales service center.
When contacting the after-sales service center, please collect the following information to facilitate quick problem resolution.

1. Inverter information, such as: serial number, software version, device installation time, fault occurrence time, fault occurrence frequency, etc.
2. Device installation environment, such as: weather conditions, whether modules are blocked or shaded, etc. For the installation environment, it is recommended to provide photos, videos, and other files to assist in problem analysis.
3. Grid conditions.

No.	Fault Name	Fault Cause	Solution
1	Grid Power Outage	1. Grid power outage. 2. The AC line or AC Switch is disconnected.	1. The alarm automatically disappears after the grid power supply is restored. 2. Check whether the AC line or AC Switch is disconnected.
2	Grid Overvoltage Protection	Grid voltage is above the allowable range, or the high-voltage Duration exceeds the high-voltage ride-through setting.	1. If it occurs occasionally, it may be a short-term grid abnormality. After the inverter detects that the grid is normal, it will resume normal operation and no manual intervention is required. 2. If it occurs frequently, please check whether the grid voltage is within the allowable range. • If the grid voltage exceeds the allowable range, contact the local power operator. • If the grid voltage is within the allowable range, modify the grid voltage after obtaining approval from the local power operator. 3. If it cannot recover for a long time, check whether the AC-side circuit breaker and output cable are connected properly.

3	Grid Rapid Overvoltage Protection	Grid Voltage Abnormal or an excessively high voltage has triggered the fault.	1. If it occurs occasionally, it may be a short-term grid abnormality. After the inverter detects that the grid is normal, it will resume normal operation and no manual intervention is required. 2. If it occurs frequently, please check whether the grid voltage is within the allowable range. • If the grid voltage exceeds the allowable range, contact the local power operator. • If the grid voltage is within the allowable range, modify the grid voltage after obtaining approval from the local power operator. 3. If it cannot recover for a long time, check whether the AC-side circuit breaker and output cable are connected properly.

4	Grid Undervoltage Protection	Grid voltage is below the allowable range, or the low-voltage Duration exceeds the low-voltage ride-through setting.	1. If it occurs occasionally, it may be a short-term grid abnormality. After the inverter detects that the grid is normal, it will resume normal operation and no manual intervention is required. 2. If it occurs frequently, please check whether the grid voltage is within the allowable range. • If the grid voltage exceeds the allowable range, contact the local power operator. • If the grid voltage is within the allowable range, modify the grid voltage after obtaining approval from the local power operator. 3. If it cannot recover for a long time, check whether the AC-side circuit breaker and output cable are connected properly.

5	Grid 10min Overvoltage	The 10-minute sliding average of the grid voltage exceeds the range specified by safety regulations.	1. If it occurs occasionally, it may be a short-term grid abnormality. After the inverter detects that the grid is normal, it will resume normal operation and no manual intervention is required. 2. Check whether the grid voltage has been operating at a relatively high voltage for a long time. If it occurs frequently, check whether the grid voltage is within the allowable range. • If the grid voltage exceeds the allowable range, contact the local power operator. • If the grid voltage is within the allowable range, modify the Grid 10min Overvoltage setpoint after obtaining approval from the local power operator.
6	Grid Overfrequency	Grid abnormality: the actual grid frequency is higher than the local grid standard requirement.	1. If it occurs occasionally, it may be a short-term grid abnormality. After the inverter detects that the grid is normal, it will resume normal operation and no manual intervention is required. 2. If it occurs frequently, check whether the grid frequency is within the allowable range. • If not, contact the local power operator. • If yes, the Grid Overfrequency setpoint must also be modified after obtaining approval from the local power operator.

7	Grid Underfrequency	Grid abnormality: the actual grid frequency is lower than the local grid standard requirement.	1. If it occurs occasionally, it may be a short-term grid abnormality. After the inverter detects that the grid is normal, it will resume normal operation and no manual intervention is required. 2. If it occurs frequently, check whether the grid frequency is within the allowable range. • If not, contact the local power operator. • If yes, the Grid Underfrequency setpoint must also be modified after obtaining approval from the local power operator.
8	Voltage Ride-Through Undervoltage Fault	Grid abnormality: the duration of Grid Voltage Abnormal exceeds the time specified by LVRT.	1. If it occurs occasionally, it may be a short-term grid abnormality. After the inverter detects that the grid is normal, it will resume normal operation and no manual intervention is required. 2. If it occurs frequently, check whether the grid voltage is within the allowable range. If not, contact the local power operator; if yes, contact your distributor or after-sales service center.
9	HVRT Overvoltage	Grid abnormality: the duration of Grid Voltage Abnormal exceeds the time specified by HVRT.	
10	30mA GFCI Protection	During inverter operation, the input-to-ground insulation resistance becomes low.	
11	60 mA GFCI Protection		
12	150 mA GFCI Protection		

13	GFCI Slow Change Protection		1. If it occurs occasionally, it may be caused by an occasional external line abnormality. After the fault is cleared, it will resume normal operation and no manual intervention is required. 2. If it occurs frequently or cannot recover for a long time, check whether the PV string's insulation resistance to ground is too low.
14	DCI Protection Level1	High DC Component of the inverter output current exceeds the allowable range specified by safety regulations or the machine default.	1. If the abnormality is caused by an external fault (such as grid abnormality, frequency abnormality, etc.), the inverter will automatically resume normal operation after the fault disappears, without manual intervention. 2. If the alarm occurs frequently and affects the normal power generation of the plant, please contact your distributor or after-sales service center.
15	DCI Protection Level2		
16	Low Insulation Resistance	1. The PV string is short-circuited to Protection Ground. 2. The environment where the PV string is installed has been relatively humid for a long time, and the line-to-ground insulation is poor.	1. Check the impedance of the PV string to Protection Ground. If a short circuit occurs, rectify the short-circuit point. 2. Check whether the inverter's Protection Ground Wire is correctly connected. 3. If it is confirmed that the impedance is indeed lower than the default value in rainy weather conditions, reconfigure the 'Insulation Resistance Protection Point'.
17	Online Low Insulation Resistance		

18	Grounding Abnormal	1. The inverter's Protection Ground Wire is Not Connected. 2. When the output of the PV string is grounded, no isolation transformer is connected to the inverter output side.	1. Please confirm whether the inverter's Protection Ground Wire is Not Connected properly. 2. If the output of the PV string is grounded, confirm whether an isolation transformer is connected to the inverter output side.
19	L-PE Short Circuit	Low impedance or short circuit between the output phase line and PE.	Detect the impedance between the output phase line and PE, locate the low-impedance point, and repair it.
20	Hardware Export Limit Protection	Abnormal Load Fluctuation	1. If the abnormality is caused by an external fault, the inverter will automatically resume normal operation after the fault disappears, without manual intervention. 2. If this alarm occurs frequently and affects the normal power generation of the plant, please contact your distributor or after-sales service center.
21	Internal Comm Loss	1. Chip Not Powered On 2. Chip firmware version error	Disconnect the AC output-side switch and DC input-side switch. After 5 minutes, close the AC output-side switch and DC input-side switch. If the fault persists, contact your dealer or after-sales service center.

22	AC HCT check Abnormal	AC sensor sampling abnormal	Disconnect the AC output-side switch and DC input-side switch. After 5 minutes, close the AC output-side switch and DC input-side switch. If the fault persists, contact your dealer or after-sales service center.
23	GFCI HCT Check Abnormal	Leakage current sensor sampling abnormal	Disconnect the AC output-side switch and DC input-side switch. After 5 minutes, close the AC output-side switch and DC input-side switch. If the fault persists, contact your dealer or after-sales service center.
24	Relay Check Abnormal	1. Relay Abnormal (Relay Short Circuit) 2. Control Circuit Abnormal 3. AC-side wiring abnormal (possible loose connection or short circuit)	Disconnect the AC output-side switch and DC input-side switch. After 5 minutes, close the AC output-side switch and DC input-side switch. If the fault persists, contact your dealer or after-sales service center.
25	Internal Fan Abnormal	1. Fan power supply abnormal 2. Mechanical fault (locked rotor) 3. Fan aging damage	Disconnect the AC output-side switch and DC input-side switch. After 5 minutes, close the AC output-side switch and DC input-side switch. If the fault persists, contact your dealer or after-sales service center.
26	External Fan Abnormal		
27	Flash R/W Abnormal	Internal storage Flash abnormal	Disconnect the AC output-side switch and DC input-side switch. After 5 minutes, close the AC output-side switch and DC input-side switch. If the fault persists, contact your dealer or after-sales service center.

28	DC Arcing Failure	1. DC string connection terminals are not securely connected. 2. DC wiring is damaged.	Check whether the string connection cables are normal, and whether the wiring is correct and the contact is good.
29	AFCI Check Failure	AFCI Detection Device Abnormal	Disconnect the AC output-side switch and DC input-side switch. After 5 minutes, close the AC output-side switch and DC input-side switch. If the fault persists, contact your dealer or after-sales service center.
30	INV Module Overtemperature Mode	1. The inverter installation location is not ventilated. 2. Ambient Overtemperature. 3. Internal fan operation abnormal.	1. Check whether the ventilation at the inverter installation location is adequate and whether the ambient temperature exceeds the maximum allowable ambient temperature range. 2. If there is no ventilation or Ambient Overtemperature occurs, improve ventilation and heat dissipation. 3. If both ventilation and ambient temperature are normal, contact your dealer or after-sales service center.
31	Cabinet Overtemperature		
32	BST module temperature too high		
33	Cabinet Under Temperature	Ambient temperature too low	1. Check whether the ambient temperature is too low. Wait for the temperature to rise to the machine's operating Voltage Range and check whether the machine works normally. 2. If ventilation and ambient temperature are normal, please contact your distributor/GoodWe Customer Service Center

34	1.5V Ref Abnormal	Reference circuit fault	Disconnect the AC output-side switch and DC input-side switch. After 5 minutes, close the AC output-side switch and DC input-side switch. If the fault persists, contact your dealer or after-sales service center.
35	0.3V Ref Abnormal	Reference circuit fault	
36	0.8V Ref Abnormal	Reference circuit fault	
37	Bus Overvoltage	1. PV Voltage Too High 2. Inverter BUS voltage sampling abnormal 3. The isolation performance of the dual-split transformer at the rear end of the inverter is poor, causing mutual interference when two inverters are connected to the grid. One of the inverters reports DC overvoltage when connected to the grid.	AC output side switch and DC input side switch. If the fault still exists, please contact your distributor or after-sales service center.
38	P-Bus Overvoltage		
39	N-Bus Overvoltage		
40	PV Input Overvoltage	Incorrect PV array configuration; too many PV modules are connected in series in the string.	Check the series configuration of the corresponding PV array string and ensure that the open-circuit voltage of the string does not exceed the inverter's maximum operating voltage.

41	PV Continuous Hardware Overcurrent	1. Improper module configuration 2. Hardware Damage	Disconnect the AC output side switch and DC input side switch. After 5 minutes, close the AC output side switch and DC input side switch. If the fault still exists, please contact your distributor or after-sales service center.
42	PV Continuous Software Overcurrent	1. Improper module configuration 2. Hardware Damage	Disconnect the AC output side switch and DC input side switch. After 5 minutes, close the AC output side switch and DC input side switch. If the fault still exists, please contact your distributor or after-sales service center.
43	String Reverse Connection (String 1 to String 20)	PV String Reverse Connection	Check whether the string is connected in reverse.
44	PV Voltage Low	Low irradiance or abnormal irradiance variation	1. If it occurs occasionally, it may be due to abnormal irradiance. The inverter will automatically resume normal operation without manual intervention. 2. If it occurs frequently, please contact your dealer/after-sales service center.
45	BUS Voltage Low	Low irradiance or abnormal irradiance variation	1. If it occurs occasionally, it may be due to abnormal irradiance. The inverter will automatically resume normal operation without manual intervention. 2. If it occurs frequently, please contact your dealer/after-sales service center.

46	BUS Soft Start Failure	Boost Drive Circuit Abnormality	Disconnect the AC output side switch and DC input side switch. After 5 minutes, close the AC output side switch and DC input side switch. If the fault persists, contact your dealer/after-sales service center.
47	BUS Voltage Unbalance	1. Inverter Sampling Circuit Abnormality. 2. Hardware Abnormality.	Disconnect the AC output side switch and DC input side switch. After 5 minutes, close the AC output side switch and DC input side switch. If the fault persists, contact your dealer/after-sales service center.
48	Gird Phase Lock Failure	Grid Frequency Unstable	Disconnect the AC output side switch and DC input side switch. After 5 minutes, close the AC output side switch and DC input side switch. If the fault persists, contact your dealer/after-sales service center.
49	Inverter Continuous Overcurrent	Control overcurrent caused by a short-term sudden change of the grid or load	Occasional occurrence requires no action; if this alarm occurs frequently, please contact your dealer/after-sales service center.
50	INV Software Overcurrent		
51	Phase R INV Hardware Overcurrent		
52	phase S INV Hardware Overcurrent		

53	Phase T INV Hardware Overcurrent		
54	PV Hardware Overcurrent	Low irradiance or abnormal irradiance variation	Disconnect the AC output side switch and DC input side switch. After 5 minutes, close the AC output side switch and DC input side switch. If the fault persists, contact your dealer/after-sales service center.
55	PV Software Overcurrent		
56	PV HCT Failure	Boost Current Sensor Abnormality	Disconnect the AC output side switch and DC input side switch. After 5 minutes, close the AC output side switch and DC input side switch. If the fault persists, please contact your dealer/our company's customer service center.
57	String Loss (String 1~String 20)	String fuse open (if any)	Check Whether the Fuse Is Blown
58	String Terminal Temperature High (String 1~String 20)	Terminal Overtemperature Detected	1. Check whether the terminal is loose, causing poor contact. 2. If the terminal contact is good and the alarm occurs frequently, please contact your dealer/GoodWe Customer Service Center.
59	AC Terminal Overtemperature		

8.5 Periodic Maintenance

⚠DANGER
When performing operation and maintenance on the inverter, please power off the inverter. Operating the equipment with power on may cause inverter damage or electric shock hazard.

Maintenance item	Maintenance method	Maintenance period
System cleaning	Check the heat sink and air inlet/outlet for foreign objects and dust.	Once every six months - Once a year
Fan	Check whether the fan is operating normally, whether there is any abnormal noise, and whether its appearance is normal.	Once every year
DC Switch	Open and close the DC Switch 10 times consecutively to ensure the DC Switch functions properly.	Once every year
Electrical Connection	Check whether the electrical connections are loose, whether the cables are damaged, and whether copper is exposed.	Once every six months - Once a year
Sealing Performance	Check whether the sealing of the equipment cable entry holes meets requirements. If the gaps are too large or the holes are not sealed, reseal them.	Once every year

Fan Maintenance

For fan maintenance, refer to the following steps:

The GT series inverter is equipped with an external fan module, which is inserted into the rear of the inverter from the left side of the inverter. This fan must be cleaned with a vacuum cleaner every year. For thorough cleaning, remove the fan from the unit before cleaning.

1. Disconnect the AC Switch between the inverter and the grid, and disconnect the DC Switch of the inverter.
2. According to the label requirements, wait until the residual voltage is completely discharged and the fan stops running.
3. Clean the fan.

- Use a screwdriver to remove the screws and pull out the fan;
- Pull out the external fan module as a whole; do not pull out an individual fan.

4. Please clean with a soft-bristle brush, cloth, or vacuum cleaner.
5. After cleaning is complete, reassemble the fan and tighten the screws.

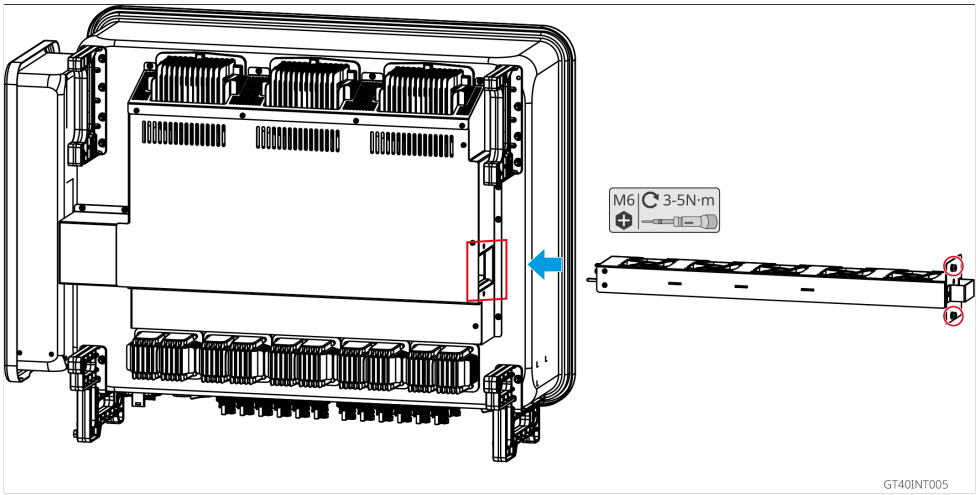

9 Technical Specifications

Technical Data	GW150K-GT-G10	GW100K-GT-L-G10
Input		
Max. Input Power (kW)	225	180
Max. Input Voltage (V)	1100*1	900
MPPT Operating Voltage Range (V)*2	180~1000	180~900
MPPT Voltage Range at Nominal Power (V)	500~850V@380V/400/415Vac 600~850V @480Vac	330~650
Start-up Voltage (V)	200	200
Nominal Input Voltage (V)	600V@380/400/415Vac, 720V @480Vac	370
Max. Input Current per MPPT (A)	42	42
Max. Short Circuit Current per MPPT (A)	52.5	52.5
Max. Backfeed Current to The Array (A)	0	0
Number of MPP Trackers	10	10
Number of Strings per MPPT	2	2
Output		
Nominal Output Power (kW)	150	100*3

Nominal Output Apparent Power (kVA)	150	100*3
Max. AC Active Power (kW)	165*6	100*3
Max. AC Apparent Power (kVA)	165*6	100*3
Nominal Power at 40℃ (kW) For Brazil only	150	100*3
Max. Power at 40℃ (Including AC Overload) (kW) For Brazil only	150	100*3
Nominal Output Voltage (V)	220/380,230/400, 240/415, 277/480V, 3L/N/PE or 3L/PE	127/220V,133/230V, 3L/N/PE or 3L/PE*7
Output Voltage Range (V)	323~528	176~253
Nominal AC Grid Frequency (Hz)	50/60	50/60
AC Grid Frequency Range (Hz)	45-55/55-65	45~55/55~65
Max. Output Current (A)	250.7A @380Vac 238.2A @400Vac 229.6A @415Vac 198.5A @480Vac	251
Max. Output Fault Current (Peak and Duration) (A)	460@5μs	460@5μs
Inrush Current (Peak and Duration)(A)	120@1μs	120@1μs

Nominal Output Current (A)	227.9A @380Vac 216.5A @400Vac 208.7A @415Vac 180.4A @480Vac	251
Power Factor	~1 (Adjustable from 0.8 leading to 0.8 lagging)	~1 (Adjustable from 0.8 leading to 0.8 lagging)
Max. Total Harmonic Distortion	<3%	<3%
Maximum Output Overcurrent Protection (A)	460	460
Efficiency		
Max. Efficiency	99.0%	98.8%
European Efficiency	98.5%	98.3%
CEC Efficiency	98.5%	98.3%
Protection		
PV String Current Monitoring	Integrated	Integrated
PV Insulation Resistance Detection	Integrated	Integrated
Residual Current Monitoring	Integrated	Integrated
PV Reverse Polarity Protection	Integrated	Integrated
Anti-islanding Protection	Integrated	Integrated
AC Overcurrent Protection	Integrated	Integrated
AC Short Circuit Protection	Integrated	Integrated

AC Overvoltage Protection	Integrated	Integrated
DC Switch	Integrated	Integrated
DC Surge Protection	Type II (Type I + II Optional)	Type II (Type I + II Optional)
AC Surge Protection	Type II	Type II
AFCI*4	Optional	Optional
Emergency Power Off	Optional	/
Rapid Shutdown	Optional	Optional
Remote Shutdown*5	Optional	Optional
PID Recovery	Optional	Optional
Reactive Power Compensation at Night	Optional	/
Power Supply at Night	Optional	Optional
I-V Curve Scan	Optional	Optional
General Data		
Operating Temperature Range (℃)	-30 ~ +60	-30 ~ +60
Storage Temperature (℃)	-40 ~ +70	-40 ~ +70
Relative Humidity	0 ~ 100%	0 ~ 100%
Max. Operating Altitude (m)	4000	4000
Cooling Method	Smart Fan Cooling	Smart Fan Cooling
User Interface	LED, LCD (Optional) , APP	LED, LCD (Optional) , APP

Communication	RS485, WiFi+LAN+Bluetooth, 4G+Bluetooth	RS485, WiFi+LAN+Bluetooth, 4G+Bluetooth
Communication Protocols	Modbus-RTU (SunSpec Compliant), Modbus-TCP	Modbus-RTU (SunSpec Compliant), Modbus-TCP
Weight (kg)	≤99	≤99
Dimension (W×H×D mm)	995×758×358	995×758×358
Noise Emission (dB)	<65	<65
Topology	Non-isolated	Non-isolated
Self-consumption at Night (W)	<2	<2
Ingress Protection Rating	IP66	IP66
Anti-corrosion Class	C4，C5 (Optional)	C4，C5 (Optional)
DC Connector	MC4 (4~6mm^2)	MC4 (4~6mm^2)
AC Connector	OT/DT terminal (Max. 400 mm^2)	OT/DT terminal (Max. 400 mm^2)
Environmental Category	4K4H	4K4H
Pollution Degree	III	III
Overvoltage Category	DCII / ACIII	DCII / ACIII
Protective Class	I	I
The Decisive Voltage Class (DVC)	PV：C	PV：C
	AC：C	AC：C
	com：A	com：A

Active Anti-islanding Method	AFDPF + AQDPF	AFDPF + AQDPF
Country of Manufacture	China	China

*1: When the input voltage ranges from 1000V to 1100V, the inverter will enter the standby state. When the input voltage returns to the MPPT operating voltage range, the inverter will resume normal operating state.

*2: Please refer to the user manual for the MPPT Voltage Range at Nominal Power.(Note on the official website promotional leaflet)

*3: 95.6kW/KVA for 220V, 90.4kW/kVA for 208V.

*4: For Brazil and Mexico, AFCI: Integrated.

*5: For Brazil, Remote Shutdown: Integrated.

*6: For Chile and Sri Lanka, Max. AC Active Power (kW) and Max. AC Apparent Power (kVA): 150kW/kVA.

*7: For some regions, Nominal Output Voltage (V): 120/208, 3L/N/PE or 3L/PE.

10 Glossary

Overvoltage Category Definitions
Overvoltage Category I: Equipment connected to circuits in which measures are taken to limit transient Overvoltage to a relatively low level.
Overvoltage Category II: Energy-consuming equipment supplied by a fixed installation. Such equipment includes appliances, portable tools, and other household and similar loads. If special requirements are placed on the reliability and availability of such equipment, Overvoltage Category III is used.
Overvoltage Category III: Equipment in fixed installations, where the reliability and availability of the equipment must meet special requirements. Includes switchgear in fixed installations and industrial equipment permanently connected to a fixed installation.
Overvoltage Category IV: Equipment used at the origin of the installation, including measuring instruments and primary overcurrent Protection devices.

Definitions of Wet Location Categories

Environmental Parameters	Level		
	3K3	4K2	4K4H
Temperature Range	0~+40℃	-33~+40℃	-33~+40℃
Humidity Range	5% to 85%	15% to 100%	4% to 100%

Environmental Category Definitions:
Outdoor inverter: ambient air temperature range of -25 to +60°C, suitable for environments with Pollution Degree 3;
Indoor Type II inverter: ambient air temperature range of -25 to +40°C, suitable for environments with Pollution Degree 3;
Indoor Type I inverter: ambient air temperature range 0~+40°C, suitable for Pollution Degree 2 environments;

Pollution Degree Category Definitions
Pollution Degree 1: No pollution or only dry, non-conductive pollution;
Pollution Degree 2: Normally, only non-conductive pollution occurs, but temporary conductive pollution caused by occasional condensation must be considered;
Pollution Degree 3: Conductive pollution, or non-conductive pollution that becomes conductive due to condensation;
Pollution Degree 4: Persistent conductive pollution, for example, pollution caused by conductive dust or rain and snow.

11 Obtaining Related Product Manuals

Document Name	Official Website Link
4G Kit-CN-G20 or 4G Kit-CN-G21-21 Quick Installation Guide	GW_4G Communication Module_Quick Installation Guide)
SEC3000 User Manual	GW_SEC3000 Series_User Manual
EzLogger3000C User Manual	EzLogger3000C User Manual
GMK330 & GMK360 & GM330 Quick Installation Guide	GW_GMK330 GMK360 GM330_Quick Installation Guide

12 Contact Information

GoodWe Technologies Co., Ltd.
No. 90 Zijin Road, High-tech District, Suzhou, China
400-998-1212
www.goodwe.com
service@goodwe.com