V1.4 2026-10-30

SEC3000C

User Manual

GOODWE

Copyright Notice

Copyright©GoodWe Technologies Co., Ltd. 2026. All rights reserved.

Without authorization from GoodWe Technologies Co., Ltd., no part of this manual may be reproduced, disseminated, or uploaded to public networks or other third-party platforms in any form.

Trademark Authorization

GOODWEand otherGOODWEtrademarks used in this manual are owned by GoodWe Technologies Co., Ltd. All other trademarks or registered trademarks mentioned in this manual are the property of their respective owners.

NOTICE

Due to product version upgrades or other reasons, the content of this document may be updated periodically. Unless otherwise agreed, the content of this document does not replace the safety precautions on the product labels. All descriptions in this document are for guidance only.

Preface

Overview

This document mainly introduces the product information, installation and wiring, configuration and commissioning, troubleshooting, and maintenance of the Smart Energy Control Box. Before installing and using the product, please read this manual carefully to understand the product safety information and familiarize yourself with the product's functions and features. The document may be updated from time to time; please obtain the latest version of the documentation and more product information from the official website.

Applicable Products

This document applies to the Smart Energy Control Box model SEC3000C, hereinafter referred to as the control box.

Symbol Definitions

⚠DANGER
Indicates a high potential hazard that, if not avoided, will result in death or serious injury.
⚠WARNING
Indicates a moderate potential hazard that, if not avoided, could result in death or serious injury.
⚠CAUTION
Indicates a low potential hazard that, if not avoided, may result in moderate or minor injury.
NOTICE
Emphasis and supplementation of the content may also provide tips or tricks for optimized product use, helping you solve a problem or save time.

Table of Contents

1 Safety Precautions 9
1.1 General Safety 9
1.2 Personnel Requirements 10
1.3 Grounding Safety 11
1.4 Personal Safety 12
1.5 Equipment Safety 12
1.6 Safety Symbols and Certification Mark Description 13
1.7 EU Declaration of Conformity 14
1.7.1 Devices with Wireless Communication Function 14
1.7.2 Devices Without Wireless Communication Function 14
2 System Introduction 15
2.1 Function Description 15
2.2 Circuit Block Diagram 15
2.3 Model Description 16
2.4 Appearance Overview 16
2.5 Component Description 17
2.6 Dimensions 19
2.7 Indicator Light Description 20
2.8 Nameplate Description 21
3 Equipment Inspection and Storage 23
3.1 Device Inspection 23

3.2 Delivered Items 23
3.3 Device Storage 24
4 Installation 26
4.1 Installation Requirements 26
4.1.1 Installation Environment Requirements 26
4.1.2 Tool Requirements 27
4.2 Control Box Installation 28
5 System Wiring 31
5.1 Detailed System Wiring Diagram 31
5.1.1 SEC3000C+ESA261 Series Integrated Energy Storage Cabinet 33
5.1.2 SEC3000C+ET100Kw Series Inverter 44
5.1.3 SEC3000C+ETR125Kw Series Inverter 51
5.2 Pre-Wiring Preparation 52
5.3 Connect the Protection Ground Wire 54
5.4 Connect Single-Phase AC Wires 54
5.5 Connect Three-Phase AC Wires 55
5.6 Connect the Meter CT Cable 55
5.7 Connect RS485 Communication Cable 57
5.8 Connect Network Cable 58
5.9 Install 4G Antenna (Optional) 58
5.10 Connect DO/DI/AI/PT Cables 59
6 System Trial Operation 61

6.1 System Pre-Power-on Inspection 61
6.2 System Power-On 61
6.3 Indicator Light Description 61
6.4 Close Cabinet Door 63
7 System Commissioning 64
7.1 WEB Interface Introduction 64
7.1.1 WEB Interface Layout 64
7.1.2 WEB Interface Menu 66
7.1.3 Log in to WEB Interface 72
7.2 Configure Startup Wizard 74
7.3 System Scenario Parameter Settings 79
7.3.1 Microgrid Scenario Parameter Settings (ET100) 79
7.3.2 Microgrid Scenario Parameter Settings (ESA261) 80
7.4 Device Management 81
7.4.1 Automatically Search and Add Devices 81
7.4.2 Manually Add Devices 84
7.4.3 Set Port Parameters 90
7.4.3.1 Set LAN Communication Parameters 91
7.4.3.2 Set Wifi Password and SSID 93
7.4.3.3 Set RS485 Communication Parameters 93
7.4.4 Set Modbus-TCP Parameters 95
7.5 Set Device Parameters 97

7.5.1 Set Energy Storage Inverter Parameters 97
7.5.1.1 Set Safety Code 97
7.5.1.2 Set Wiring Mode 98
7.5.1.3 Set Battery Connection Parameters 99
7.5.1.4 Set General Data for Energy Storage Inverter 99
7.5.1.5 Set Advanced Parameters for Energy Storage Inverter 101
7.5.1.6 Set Generator Parameters 104
7.5.1.7 Set Custom Safety Parameters for Energy Storage Inverter 107
7.5.2 Set Meter Parameters 107
7.5.3 Set Grid-Tied Inverter Parameters 109
7.5.4 Set Energy Storage Integrated Cabinet Parameters 125
7.5.4.1 Set Safety Country for Energy Storage Integrated Cabinet 125
7.5.4.2 Set General Data for Energy Storage Integrated Cabinet 126
7.5.4.3 Set Advanced Parameters for Energy Storage Integrated Cabinet 128
7.5.4.4 Set Custom Safety Parameters for Energy Storage Integrated Cabinet 130
7.5.5 Set STS Parameters 130
7.5.6 Device Power on/Off 132
7.6 Set System Parameters 132
7.6.1 Set Grid Connection Control Parameters 132
7.6.1.1 Set Control Box Working Mode 133
7.6.1.2 Set Control Box SOC Management Function 136

7.6.1.3 Set System Grid-Connected Power Limit 137
7.6.1.4 Set Control Box Demand Management Function 138
7.6.1.5 Set System Capacity Management 139
7.6.1.6 Set Protection Parameters for Communication Abnormality 140
7.6.2 Set Micro-Grid Control Parameters 141
7.6.3 Set DO Control Parameters 145
7.6.3.1 Set RCR Parameters 145
7.6.3.2 Set DRED Parameters 147
7.6.4 Set Dispatch Control Parameters 148
7.6.4.1 Set Reactive Power Control Parameters 148
7.6.4.2 Set Three-Phase Imbalance Control 149
7.6.4.3 Set Remote Shutdown 150
7.6.4.4 Set SOC Calibration Function 151
8 System Maintenance 153
8.1 Power off the System 153
8.2 Equipment Removal 153
8.3 Equipment Disposal 153
8.4 Periodic Maintenance 154
8.5 System Maintenance (WEB) 156
8.5.1 Upgrade the Equipment 156
8.5.2 Maintain the System 158
8.5.3 Set System Time 159

8.5.4 Change Login Password 160
8.6 Fault 161
9 Technical Specifications 164
10 Appendix 166
10.1 Custom Safety Parameters 166
10.2 Terminology 179
10.3 Product Documentation Map 180
11 Contact Information 182

1 Safety Precautions

Always observe the safety precaution information contained in this document when operating the equipment.

WARNING
The equipment has been designed and tested in strict accordance with safety regulations. However, as electrical equipment, relevant safety instructions must be observed before any operation on the equipment. Improper operation may cause serious personal injury or property damage.

1.1 General Safety

NOTICE

- Due to product version upgrades or other reasons, the content of this document may be updated periodically. Unless otherwise agreed, the content of this document does not replace the safety precautions on the product labels. All descriptions in this document are for guidance only.
- Read this document carefully before installing the equipment to understand the product and precautions.
- All operations on the equipment must be performed by professional and qualified electrical technicians who are familiar with the relevant standards and safety regulations of the project location.
- When operating the equipment, use insulated tools and wear personal protective equipment to ensure personal safety. When touching electronic components, wear anti-static gloves, anti-static wrist straps, anti-static clothing, etc., to provide Protection for the equipment against electrostatic damage.
- Unauthorized disassembly or modification may cause equipment damage, and such damage is not covered by the warranty.
- Equipment damage or personal injury caused by failure to install, use, or configure the equipment in accordance with this document or the corresponding user manual is not within the scope of the equipment manufacturer's responsibility. For more product warranty information, please visit the official website:https://en.goodwe.com/warranty。

1.2 Personnel Requirements

NOTICE

- To ensure safety, compliance, and efficiency throughout the entire process of equipment transportation, installation, wiring, operation, and maintenance, the work must be performed by professional or qualified personnel.
- Professional or qualified personnel include:
  - Personnel who have mastered the working principles and system structure of the equipment, relevant knowledge of risks and hazards, and have received professional operation training or possess extensive practical experience.
  - Personnel who have received relevant technical and safety training, possess certain operational experience, are able to recognize the dangers that specific work may pose to themselves, and can take protective measures to minimize risks to themselves and others.
  - Qualified electrical technicians who meet the regulatory requirements of the country/region where they are located.
  - Personnel with a degree in electrical engineering / an advanced diploma in electrical disciplines or equivalent / professional qualifications in the electrical field, and at least 2/3/4 years of experience in testing and supervising work using electrical equipment safety standards.
- Personnel involved in special tasks such as electrical work, work at heights, and special equipment operations must hold valid qualification certificates required by the location of the equipment.
- Medium-voltage equipment operations must be performed by certified high-voltage electricians.
- Equipment and component replacement may only be performed by authorized personnel.

1.3 Grounding Safety

DANGER

- Before installing the equipment, ensure that the installation location is reliable and stable.
- Before operating the equipment, ensure that the equipment is reliably grounded.

1.4 Personal Safety

DANGER

- When operating the equipment, use insulated tools and wear personal protective equipment to ensure personal safety.
- If the equipment is short-circuited, do not approach or touch the equipment; shut off the power immediately.
- Before making electrical connections to the equipment, disconnect all upstream switches to ensure that the equipment is de-energized.

1.5 Equipment Safety

DANGER

Before installing the equipment, ensure that the installation location is reliable and stable.

WARNING

- When performing installation, maintenance, and other operations on the equipment, use suitable tools and operate correctly.
- Observe relevant local standards and safety specifications when operating the equipment.
- Unauthorized disassembly or modification may cause equipment damage, and such damage is not covered by the warranty.

1.6 Safety Symbols and Certification Mark Description

DANGER

- After equipment installation, labels and warning signs on the enclosure must remain clearly visible and must not be obstructed, altered, or damaged.
- The following descriptions of enclosure warning labels are for reference only; refer to the labels actually used on the equipment.

No.	Symbol	Explanation
1		Potential hazards exist during equipment operation. Take proper protective measures when operating the equipment.
2		High voltage hazard. High voltage is present during equipment operation; before performing operations on the equipment, ensure that the equipment is powered off.
3		Read the product manual carefully before operating the equipment.
4		Do not dispose of the equipment as household waste. Dispose of it in accordance with local laws and regulations, or return it to the equipment manufacturer.
5		CE Certification Mark.

No.	Symbol	Explanation
6		NBTC Certification.This telecom device and equipment is conformed to requirement to NTC.

1.7 EU Declaration of Conformity

1.7.1 Devices with Wireless Communication Function

Devices with wireless communication capability that can be sold in the European market comply with the following directive requirements:

- Radio Equipment Directive 2014/53/EU (RED)
- Restrictions of Hazardous Substances Directive 2011/65/EU and (EU) 2015/863 (RoHS)
- Waste Electrical and Electronic Equipment 2012/19/EU
- Registration, Evaluation, Authorization and Restriction of Chemicals (EC) No 1907/2006 (REACH)

1.7.2 Devices Without Wireless Communication Function

Devices without wireless communication capability that can be sold in the European market comply with the following directive requirements:

- Electromagnetic compatibility Directive 2014/30/EU (EMC)
- Electrical Apparatus Low Voltage Directive 2014/35/EU (LVD)
- Restrictions of Hazardous Substances Directive 2011/65/EU and (EU) 2015/863 (RoHS)
- Waste Electrical and Electronic Equipment 2012/19/EU
- Registration, Evaluation, Authorization and Restriction of Chemicals (EC) No 1907/2006 (REACH)

2 System Introduction

2.1 Function Description

The Smart Energy Control Box is dedicated equipment for the monitoring and management platform of photovoltaic-energy storage power generation systems. It can be used to collect data from devices in the PV-energy storage power generation system, such as grid-connected inverters, energy storage inverters, and meters, store logs, and send the data to the monitoring and management platform, enabling centralized monitoring, operation, and maintenance of the PV-energy storage system.

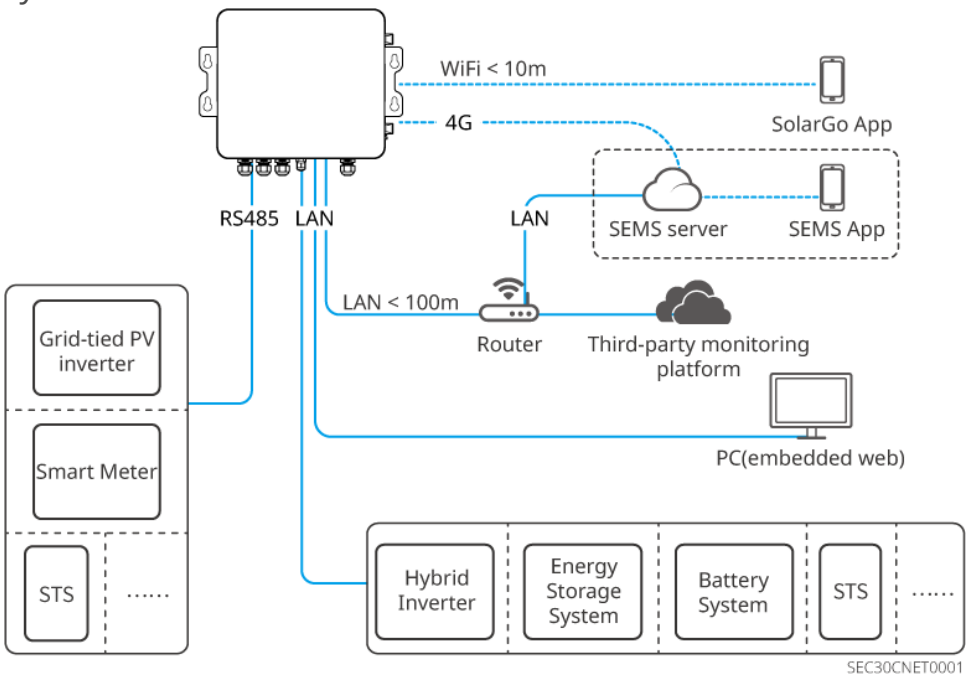

- A maximum of 20 grid-connected inverters can be connected to the same RS485 bus.
- Up to three control boxes are supported in the same system. The control box connected to the embedded WEB serves as the master control box by default.

2.2 Circuit Block Diagram

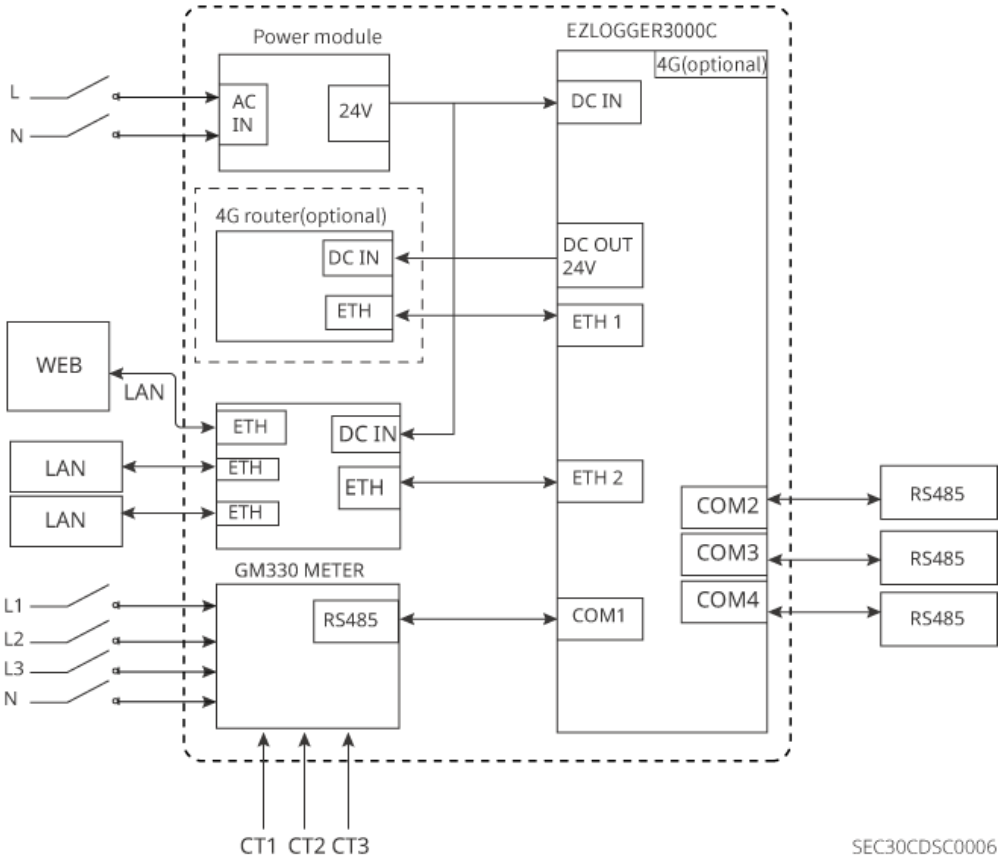

2.3 Model Description

This document mainly covers the following product models:

SEC3000C

1 2 3

No.	Meaning	Explanation
1	Product Functions	SEC: Smart Energy Control Box
2	Generation code	3000: Third-generation machine
3	Application scenarios	C: Commercial and industrial PV+ESS system

2.4 Appearance Overview

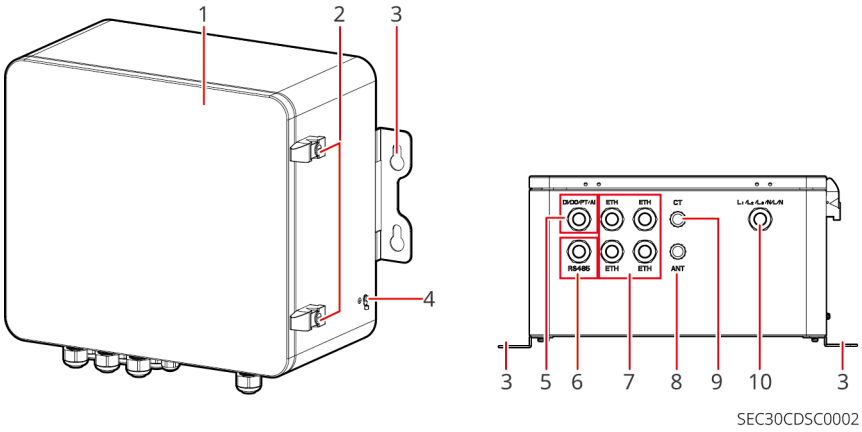

No.	Components	No.	Components
1	Cabinet door	2	Cabinet door lock
3	Mounting bracket	4	Enclosure grounding point
5	DI/DO/PT/AI communication cable entry hole	6	RS485 communication cable entry hole
7	Network cable entry hole	8	Antenna cable entry hole
9	Meter CT cable entry hole	10	AC cable entry hole

2.5 Component Description

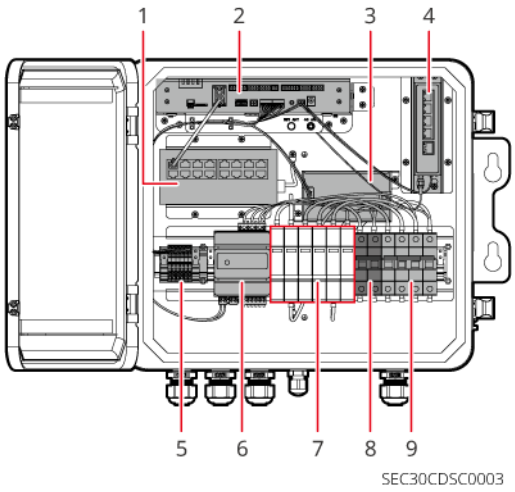

No.	Name	Description
1	Switch	• Connect to the energy storage inverter's Intelligent communication stick, energy storage system, battery, STS, and other devices via Ethernet cables. • For the currently supported inverter models and software version requirements, refer to theProduct Compatibility List。 • Connect a computer via an Ethernet cable and log in to the embeddedwebto commission the device.
2	Data collector	• Built-in Intelligent data collector, model:EzLogger3000C。 • To implement functions such asRCR, one-click shutdown, etc., connect third-party devices to the data collector. • ETH1 can be used for external network communication, such as a4Grouter.ETH2is used to connect to the switch. • Supports optional4Gfunction.
3	24Vpower module	Used to supply power toSEC3000CinternalEzLogger3000Cand switch.
4	4G router	• Optional component; can be purchased from GoodWe or purchased separately. • A reservedDINrail is provided; a self-purchased4Grouter can be installedSEC3000Cinside the enclosure. Recommended maximum dimensions:185*80*155mm; power supply:24V。

No.	Name	Description
5	RS485communication terminal	• ViaRS485communication cables, connect grid-tied inverters, Intelligent meters, STS, and other devices. • The device models currently supported for connection are subject to the actual product: ◦ For inverter model and software version requirements, refer toProduct Compatibility List。 ◦ Intelligent meter:GM330or a meter supporting high-voltage Power Limit, such asDTSD1352-CT/C。 • A1/B1ports are occupied and by default connected toSEC3000Cinternal meter. If the built-in meter is not used, the connection cable of the occupied port can be disconnected.
6	meter	• Built-in GoodWe meter, model:GM330。 • Used to detect data at the grid-connection point and implement grid-connected power regulation.
7	Surge protection module	If the surge protection module is damaged, contact the after-sales service center.
8	Single-phase circuit breaker	• Connect to the grid or backup power supply via AC cables to control the power on/off of the SEC3000Csystem. • Input Voltage Range:100-240Vac。
9	Three-phase circuit breaker	• Connect to the grid via AC cables to control the power on/off of the SEC3000C internal meter. • When connected to a three-phase four-wire grid, the supported Input Voltage Range is:172~817Vac(line voltage). • When connected to a three-phase three-wire grid, the supported Input Voltage Range is:100~472Vac(line voltage).

2.6 Dimensions

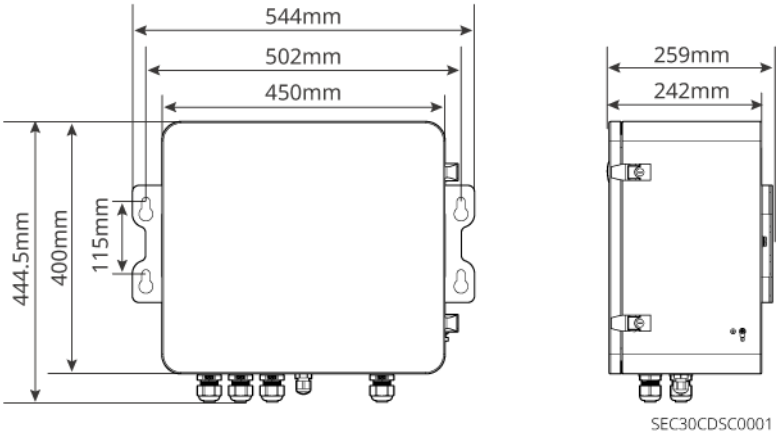

2.7 Indicator Light Description

Please check the LED indicators of the built-in data logger and Intelligent meter of SEC3000C.

Data collector

The indicator description applies only to SEC3000C with software version 06 or later.

Indicator	Indicator status	Description
PWR		Green LED steady on: device power supply is normal。
		Green LED off: device is powered off or power supply is abnormal。
RUN		Green LED steady on/off: device operating abnormally.
		Green LED flashes slowly: The device is operating normally.
NET		Green LED steady on: The device is connected to the server normally.

Indicator	Indicator status	Description
		Green LED flashes quickly: The device is connected to the router, but the server connection is abnormal.
		Green LED flashes slowly: The device is Not Connected to the router.
ALM		Red LED steady on: The device has a fault.
		Red LED flashes quickly: The device is being upgraded.
		Red LED off: The device has no fault.

Intelligent electricity meter

Type	Status	Description
Power LED 	Steady on	The meter is powered on, with no RS485 communication.
	Flashing	The meter is powered on, and RS485 communication is normal.
	Off	The meter is powered off.
Communication LED 	Off	A reserved
	Flashing	Press and hold the Reset button for ≥5 s; the Power LED and Buy/Export Energy LED flash: The meter is reset.
Buy/Export Energy LED 	Steady on	Purchase electricity from the grid.
	Flashing	Export Energy to the grid.
	Off	No electricity purchase and no Export Energy.
	A reserved	

2.8 Nameplate Description

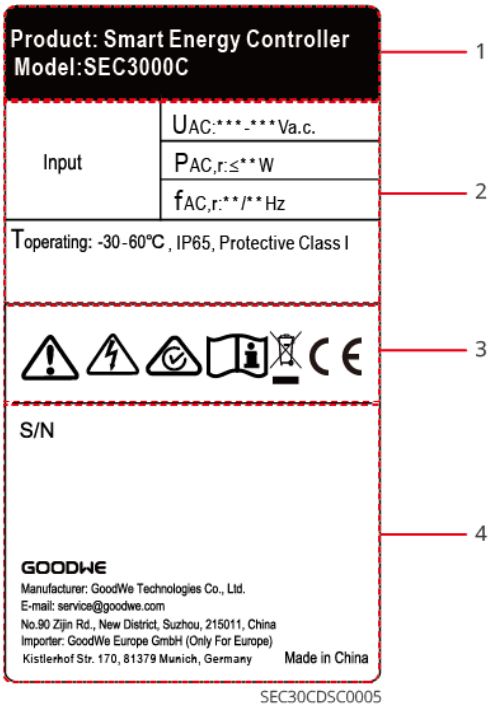

SEC30CDSC0005

No.	Description
1	Product Type and Model
2	Product Technical Specifications
3	Product Safety Compliance and Certification Marks
4	GoodWe trademark, contact information, and serial number information

3 Equipment Inspection and Storage

3.1 Device Inspection

Before signing for acceptance of the product, carefully inspect the following:

1. Check whether the outer packaging is damaged, such as deformation, punctures, cracks, or other signs that may cause damage to the equipment inside the packaging box. If there is any damage, do not open the packaging and contact your dealer.
2. Check whether the equipment model is correct. If it does not match, do not open the packaging and contact your dealer.

3.2 Delivered Items

WARNING

- Check whether the types and quantities of delivered items are correct and whether there is any appearance damage. If damaged, contact your dealer.
- After the delivered items are removed from the packaging, do not place them on rough, uneven, or sharp surfaces to prevent paint chipping.

NOTICE

*The 4G antenna is optional. N=0 or N=1.

Components	Description	Components	Description
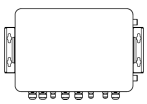	Smart Energy Control Box x 1	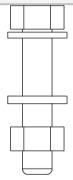	M12 expansion bolts x 4
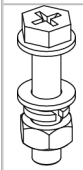	M10 combination bolts x 4		Tubular terminals x 20

Components	Description	Components	Description
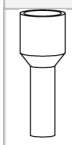	Tubular terminals x 6 L1/L2/L3/N		Grounding OT terminal x 1
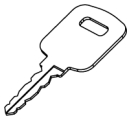	Keys x 4	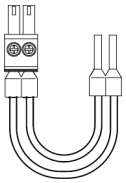	4G router power cable x 1 Only applicable to scenarios where the 4G router is not selected.
	2-pin communication terminals x 4	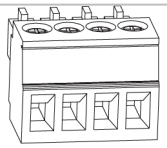	4-pin communication terminals x 4
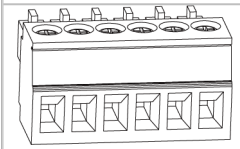	6-pin communication terminals x 2	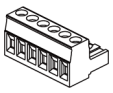	6-pin terminal x 1 Applicable to meter CTs.
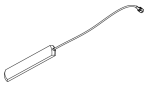	4G antenna x 1 (optional)		Fire-stop putty x 1
	Product documentation x 1	-	-

3.3 Device Storage

If the equipment is not put into use immediately, store it according to the following requirements. After long-term storage, the equipment must be inspected and confirmed by professional personnel before it can be used again.

Time Requirements:

- If the equipment is stored for more than two years or remains non-operational for more than 6 months after installation, it is recommended that it be inspected and tested by professional personnel before being put into use again.
- To ensure good electrical performance of the electronic components inside the equipment, it is recommended to power on the equipment once every 6 months

during storage. If it has not been powered on for more than 6 months, it is recommended to have it inspected and tested by professional personnel before putting it into use.

Packaging requirements:

Ensure that the outer packaging box has not been removed and that the desiccant inside the box has not been lost.

Environmental requirements:

- Ensure that the equipment is stored in a cool place and away from direct sunlight.
- Ensure that the storage environment is clean, the temperature and humidity ranges are appropriate, and there is no condensation. If condensation occurs at the equipment ports, do not install the equipment.
- Ensure that the equipment is kept away from flammable, explosive, corrosive, and other such items during storage.

Stacking requirements:

- Ensure that the equipment stacking height and orientation comply with the instructions on the labels affixed to the packaging box.
- Ensure that there is no risk of the equipment tipping over after stacking.

4 Installation

DANGER
When performing equipment installation and electrical connections, use the delivered items shipped with the box; otherwise, equipment damage caused thereby will not be covered by the warranty.

4.1 Installation Requirements

4.1.1 Installation Environment Requirements

1. Do not install the equipment in flammable, explosive, corrosive, or other such environments.
2. The temperature and humidity of the equipment installation environment must be within appropriate ranges.
3. The installation location must be out of reach of children and avoid positions that are easy to touch.
4. The equipment must be installed away from environments subject to direct sunlight, rain, snow accumulation, etc. It is recommended to install it in a sheltered location, and if necessary, a sunshade can be erected.
5. The installation space must meet the equipment ventilation and heat dissipation requirements as well as the operating space requirements.
6. The equipment Ingress Protection Rating meets outdoor installation requirements.
7. The equipment installation height must facilitate operation and maintenance, ensuring that the equipment indicators and all labels are easy to view and the wiring terminals are easy to operate.
8. The equipment installation altitude must be lower than the Max. Operating Altitude.
9. Keep away from strong magnetic field environments to avoid electromagnetic interference. If there is a radio station or wireless communication equipment operating below 30 MHz near the installation location, ensure that the distance between the equipment and the wireless electromagnetic interference equipment exceeds 30 m.

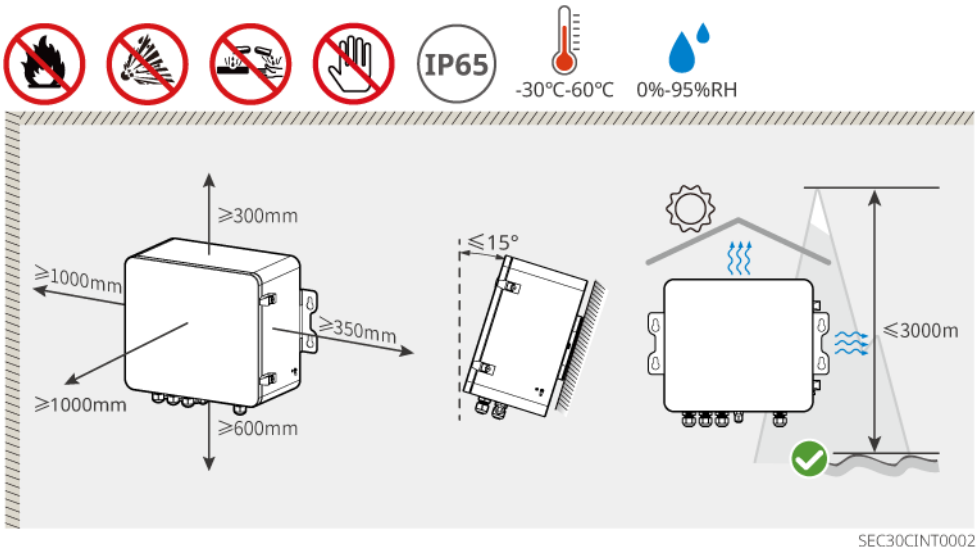

4.1.2 Tool Requirements

NOTICE
During installation, it is recommended to use the following installation tools. If necessary, other auxiliary tools may be used on site.

Installation tools

Tool type	Description	Tool type	Description
	Diagonal pliers		Crimping tool
	Wire stripper		Open-end wrench
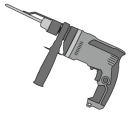	Impact drill (drill bit Φ15 mm)	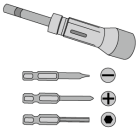	Torque wrench M4、M5、M7
	Rubber mallet		Socket wrench set

Tool type	Description	Tool type	Description
	Marker pen	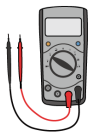	Multimeter Measuring range ≤1100 V
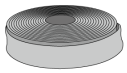	Heat-shrink tubing		Heat gun
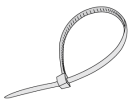	Cable ties		Vacuum cleaner
	Spirit level	-	-

Personal protective equipment

Tool type	Description	Tool type	Description
	Insulated gloves, protective gloves	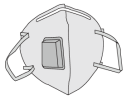	Dust mask
	Safety goggles		Safety shoes

4.2 Control Box Installation

CAUTION

- When drilling, ensure the drilling positions avoid water pipes, cables, etc. inside the wall to prevent danger.
- When drilling, wear safety goggles and a dust mask to prevent dust from being inhaled into the respiratory tract or falling into the eyes.
- Ensure the equipment is installed securely to prevent it from falling and injuring personnel.

Wall-mounted installation

Step 1: Place the equipment level against the wall and use a marker to mark the drilling positions.

Step 2: Use an impact drill to drill holes and install expansion bolts.

Step 3: Hang the equipment onto the expansion bolts and tighten the expansion bolts with a torque wrench.

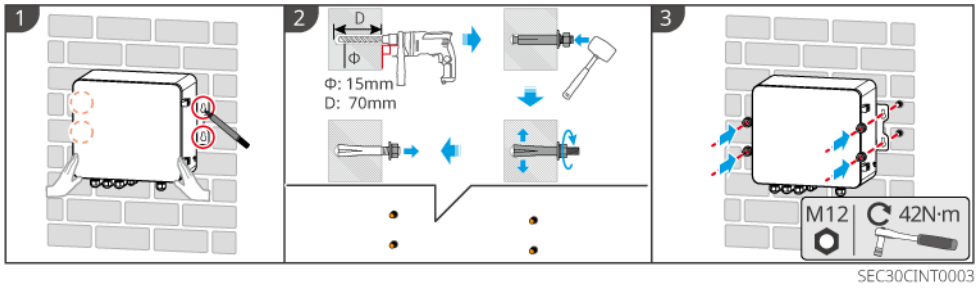

Bracket installation

NOTICE

When installing with a bracket, users must provide a bracket of appropriate size.

Step 1: Confirm the bracket mounting hole positions and use a marker to mark the drilling positions.

Step 2: Use an impact drill to drill holes.

Step 3: Mount the device onto the bracket using combination bolts, and tighten the bolts with a torque wrench.

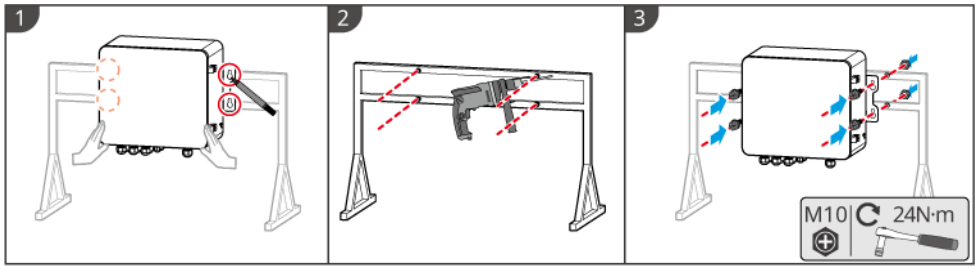

SEC30CINT0004

Pole-mounted installation

NOTICE
When using pole-mounted installation, users must provide suitable pole mounting brackets themselves.

Step 1: Secure the pole mounting bracket to the mounting pole, and tighten the bolts with a torque wrench.
Step 2: Mount the device onto the pole mounting bracket using combination bolts, and tighten the bolts with a torque wrench.

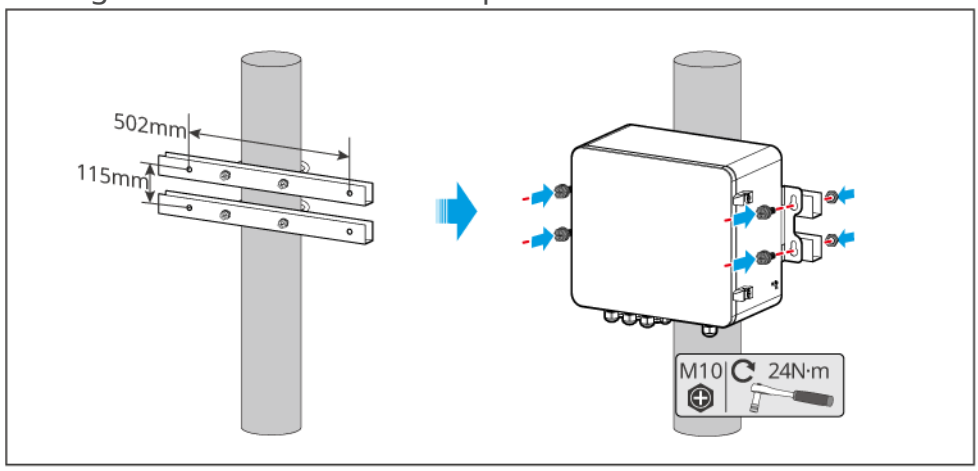

SEC30CINT0010

5 System Wiring

DANGER

- All operations during electrical connection and the specifications of cables and components used must comply with local laws and regulations.
- Before performing electrical connections, ensure that the device is powered off. Live-line operation is strictly prohibited; otherwise, hazards such as electric shock may occur.
- Cables of the same type should be bundled together and routed separately from cables of different types. Do not intertwine or cross them.
- If a cable is subjected to excessive tensile force, it may cause a poor connection. When wiring, leave a certain length of cable slack before connecting it to the device wiring port.
- When crimping terminals, ensure that the cable conductor is in full contact with the terminal. Do not crimp the cable insulation together with the terminal; otherwise, the device may fail to operate, or after operation, unreliable connections may cause heating and damage to the device terminal block.

NOTICE

- During electrical connections, wear personal protective equipment such as safety shoes, protective gloves, and insulated gloves as required.
- Only professional personnel are permitted to perform operations related to electrical connections.
- The cable colors in the figures in this document are for reference only. The specific cable specifications must comply with local regulatory requirements.
- To ensure sealing, after the cable gland is installed at the cable entry hole, seal it with fire-stop putty.

5.1 Detailed System Wiring Diagram

NOTICE

- When SEC3000C is paired with different energy storage inverters or integrated energy storage cabinets, the supported devices to be connected differ. Refer to the actual configuration.
- In the wiring diagram,RCRthe active power and reactive power adjustment values of the device are default values; for specific values, refer to the actual requirements of the grid company.
- When the built-in GM330 meter is used in high-voltage scenarios, the high voltage must be stepped down through a transformer to the low-voltage range that the meter can withstand before connecting to the meter. Ensure that the CTs used on the power lines on the high-voltage side of the grid meet the corresponding high-voltage withstand requirements.

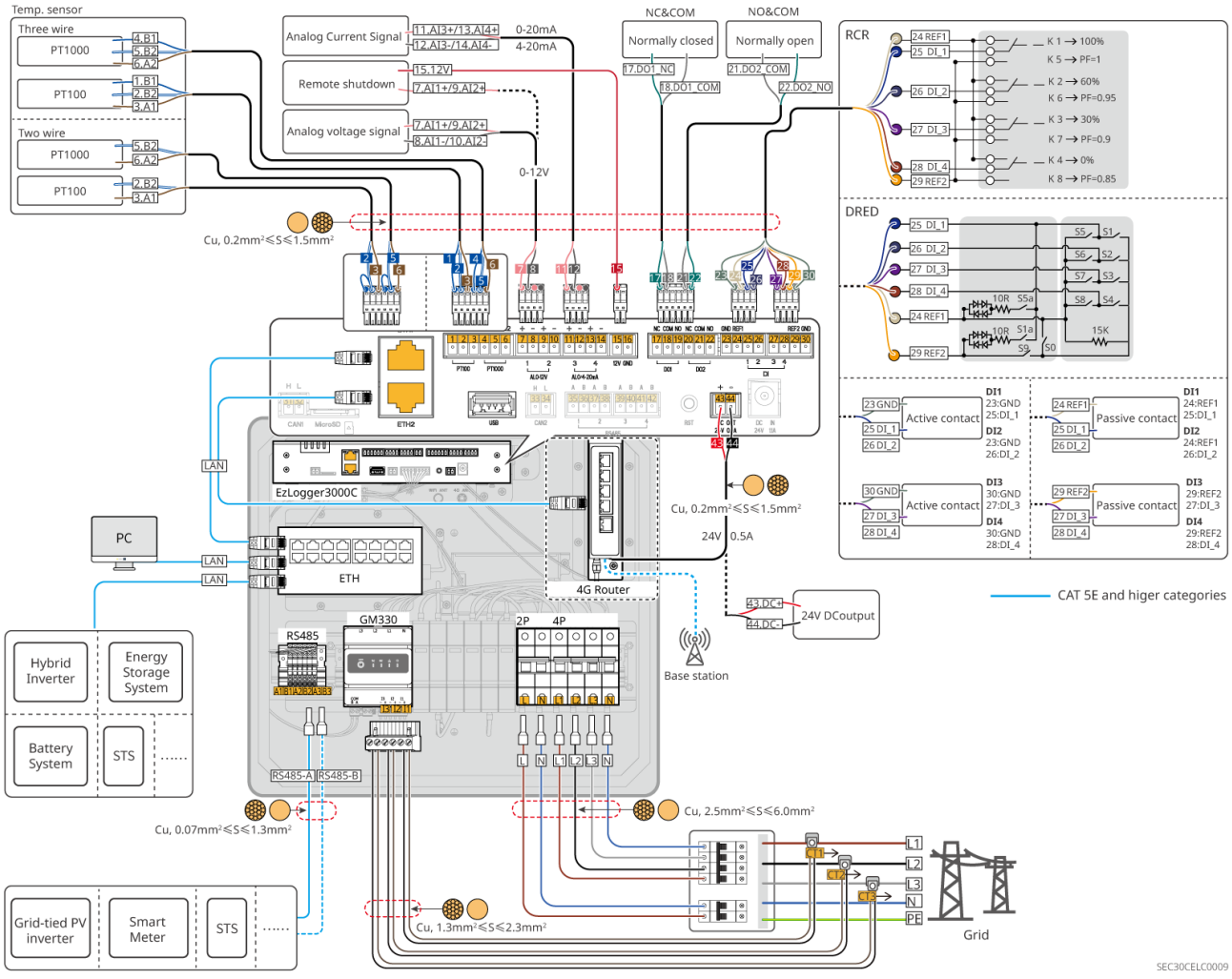

5.1.1 SEC3000C+ESA261 Series Integrated Energy Storage Cabinet

For more system information, please refer to[ESA261kWh Series Solution User Manual (Grid-connected)]orESA261kWh Series Solution User Manual (Microgrid)。

- **Grid-connected scenario (daisy-chain wiring)**

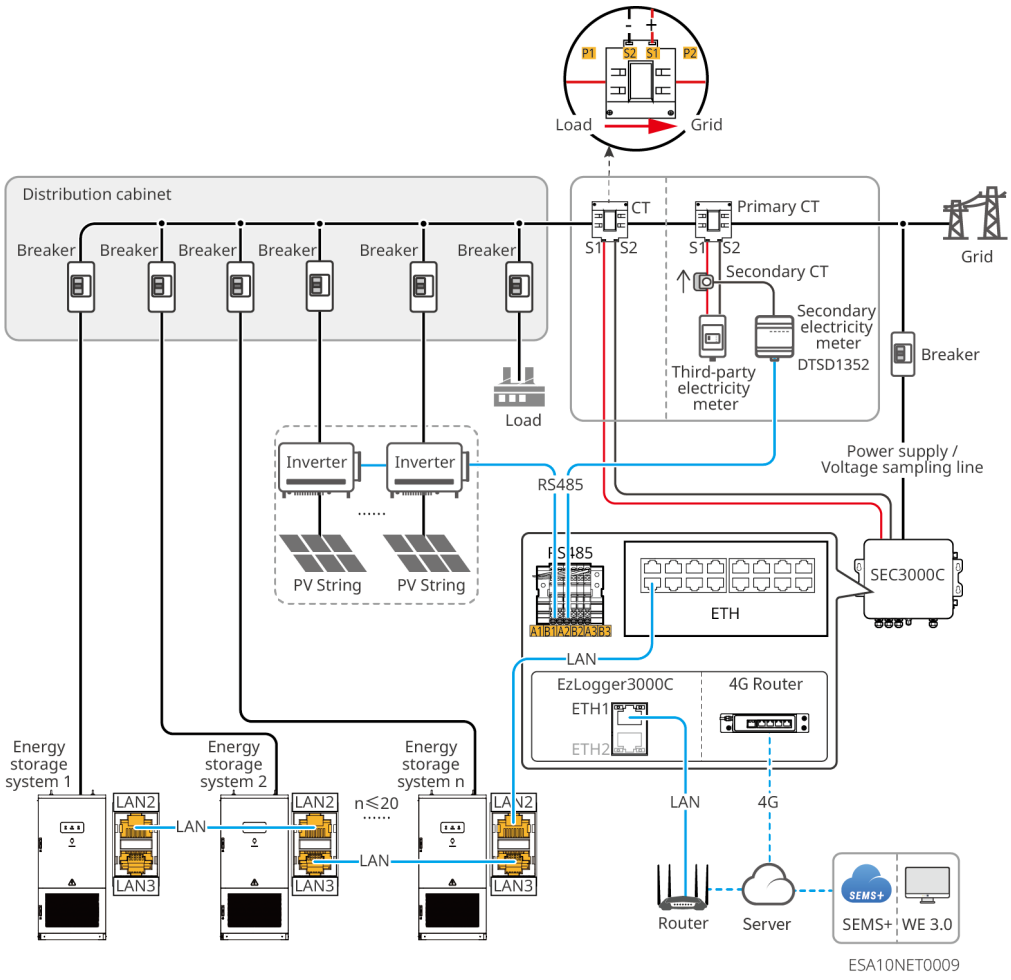

- **Grid-connected scenario (star wiring)**

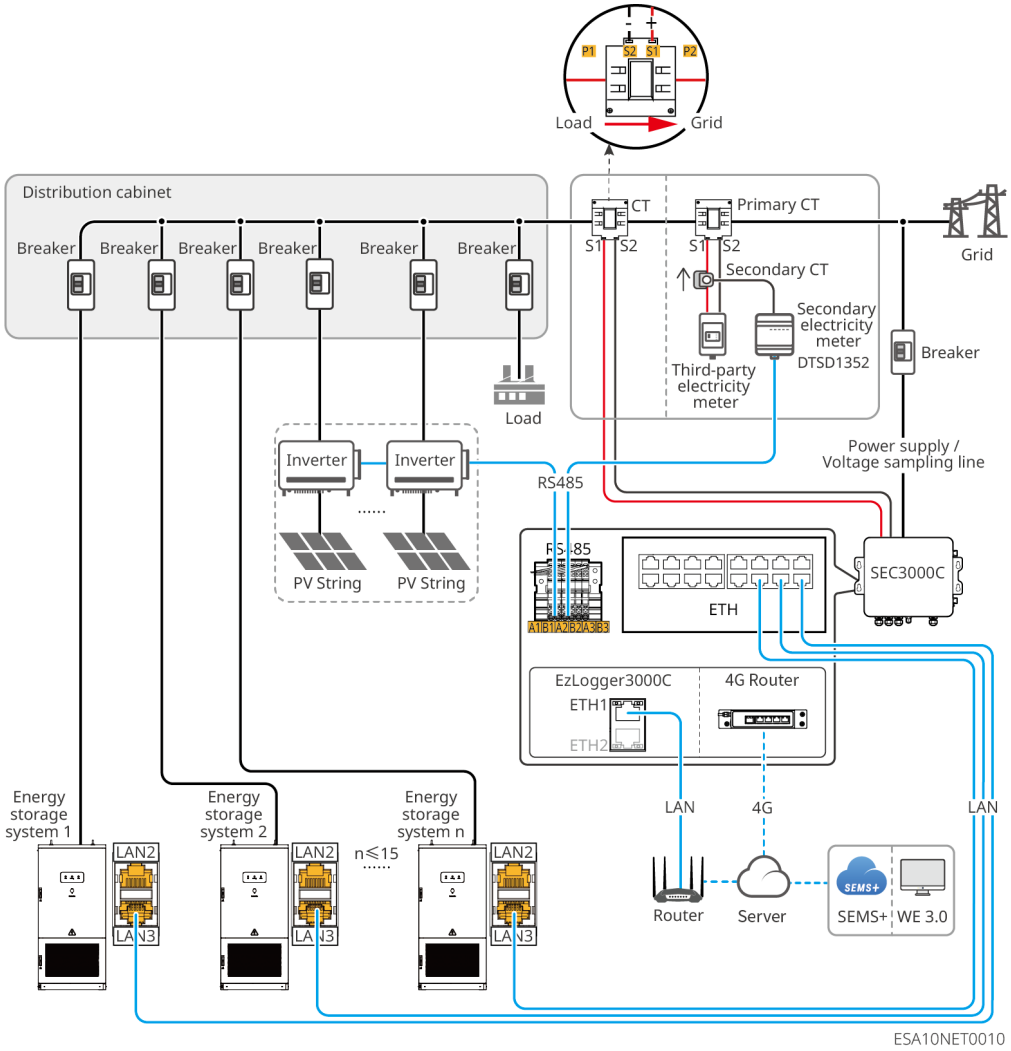

- **On/Off-grid scenario (with STS, daisy-chain wiring)**

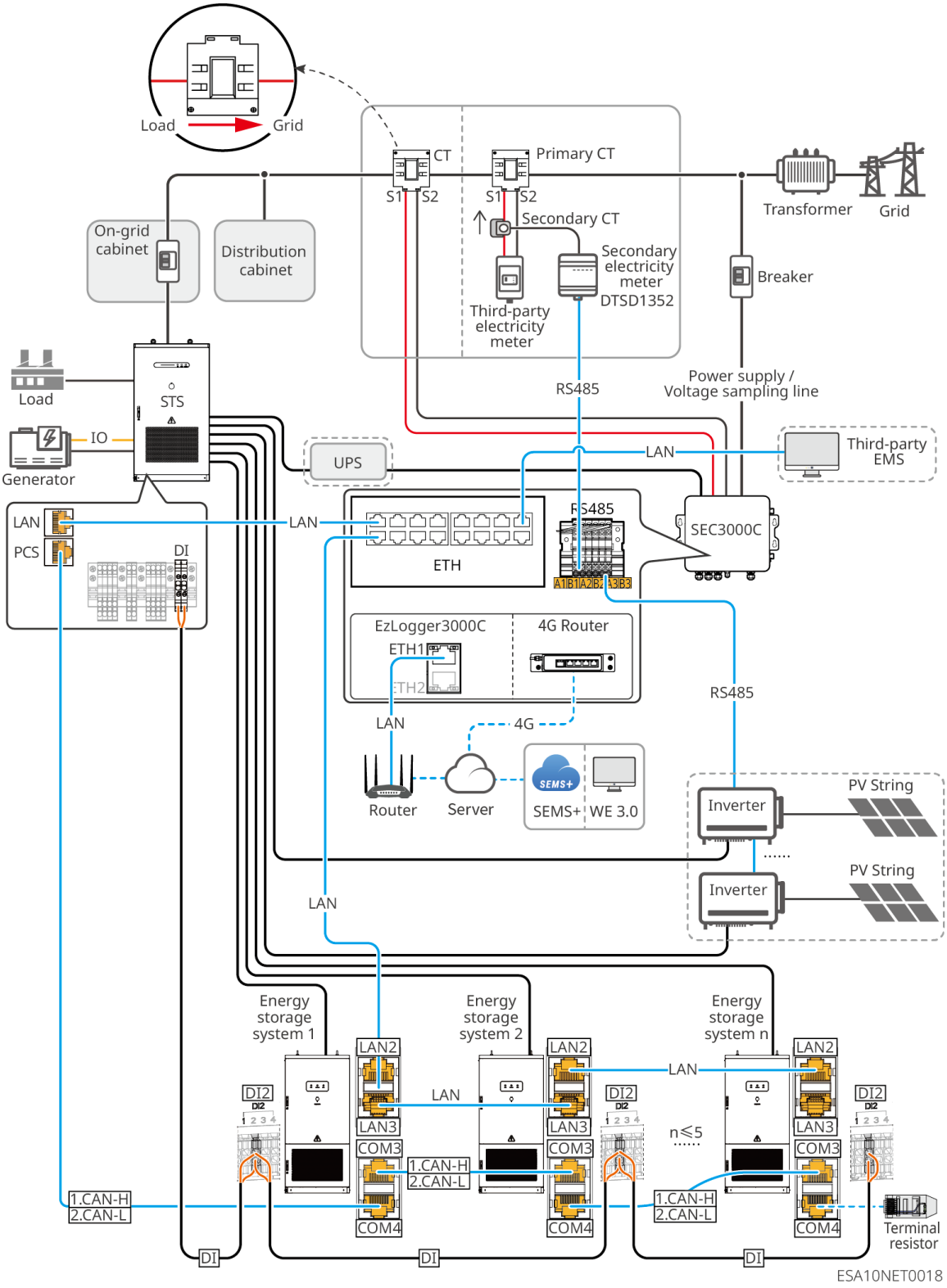

- **On/Off-grid scenario (with STS, star wiring)**

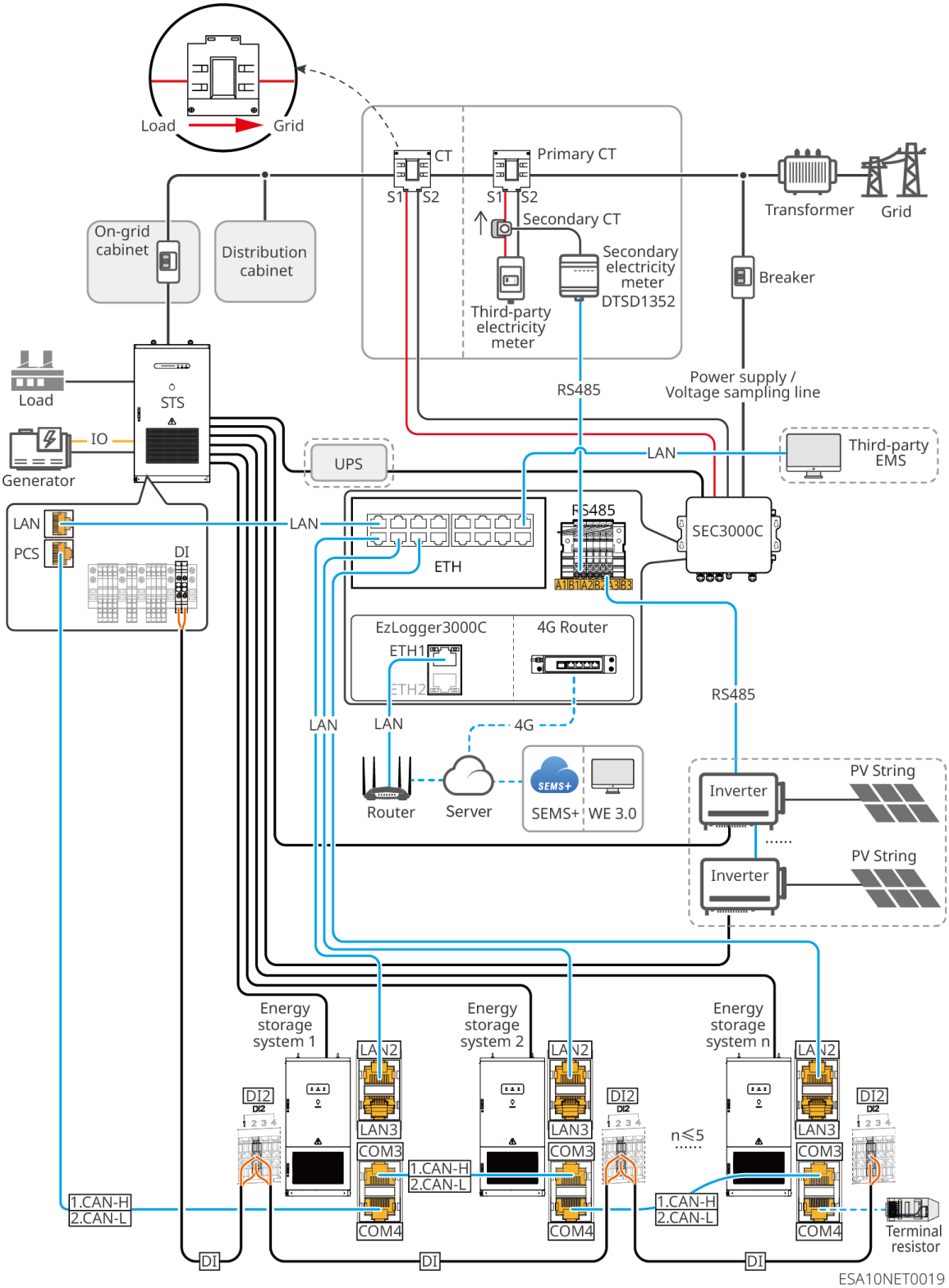

- **PV-storage On/Off-grid switching scenario (with MC synchronization)**

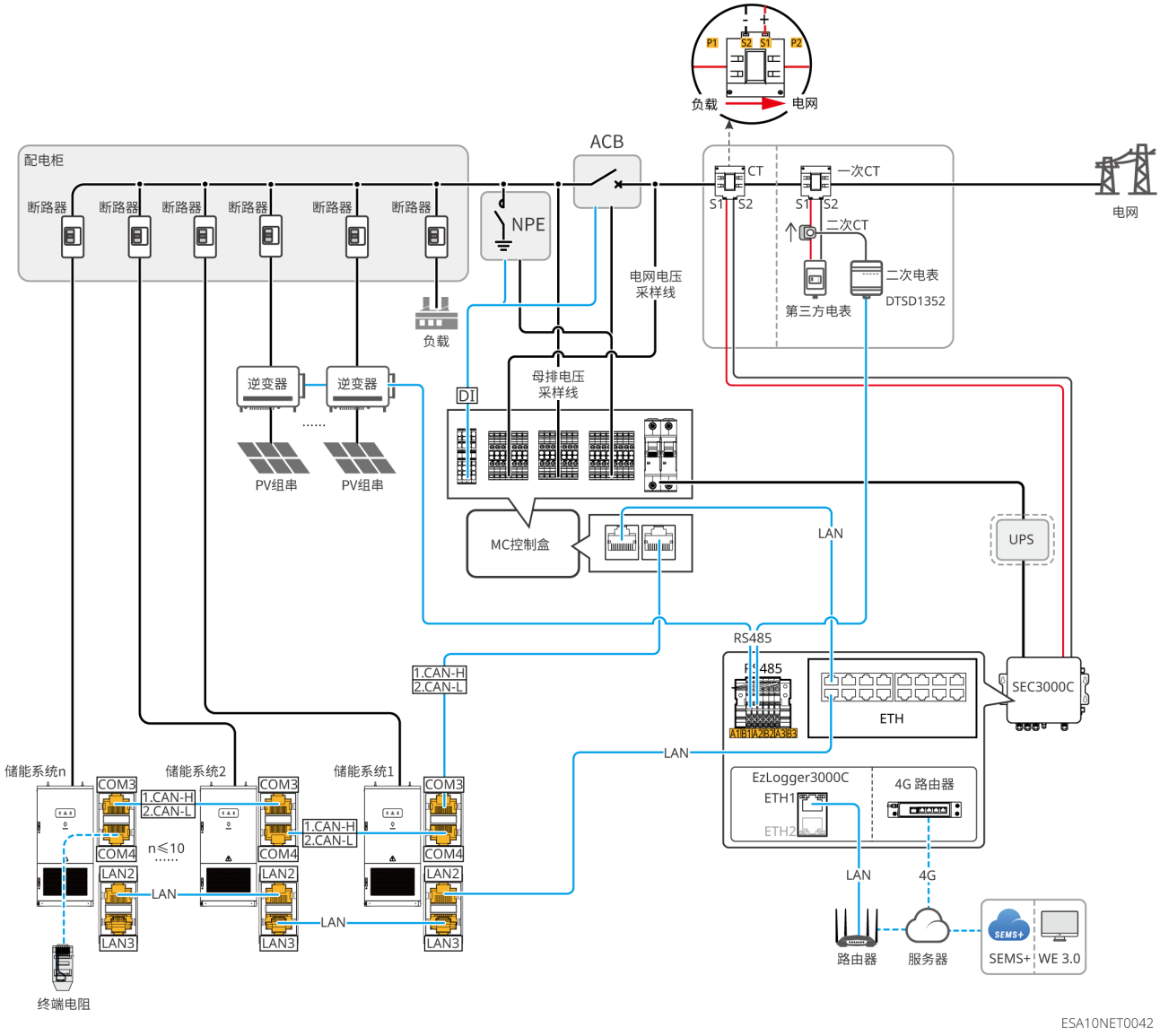

- **PV-storage On/Off-grid switching scenario (without synchronization)**

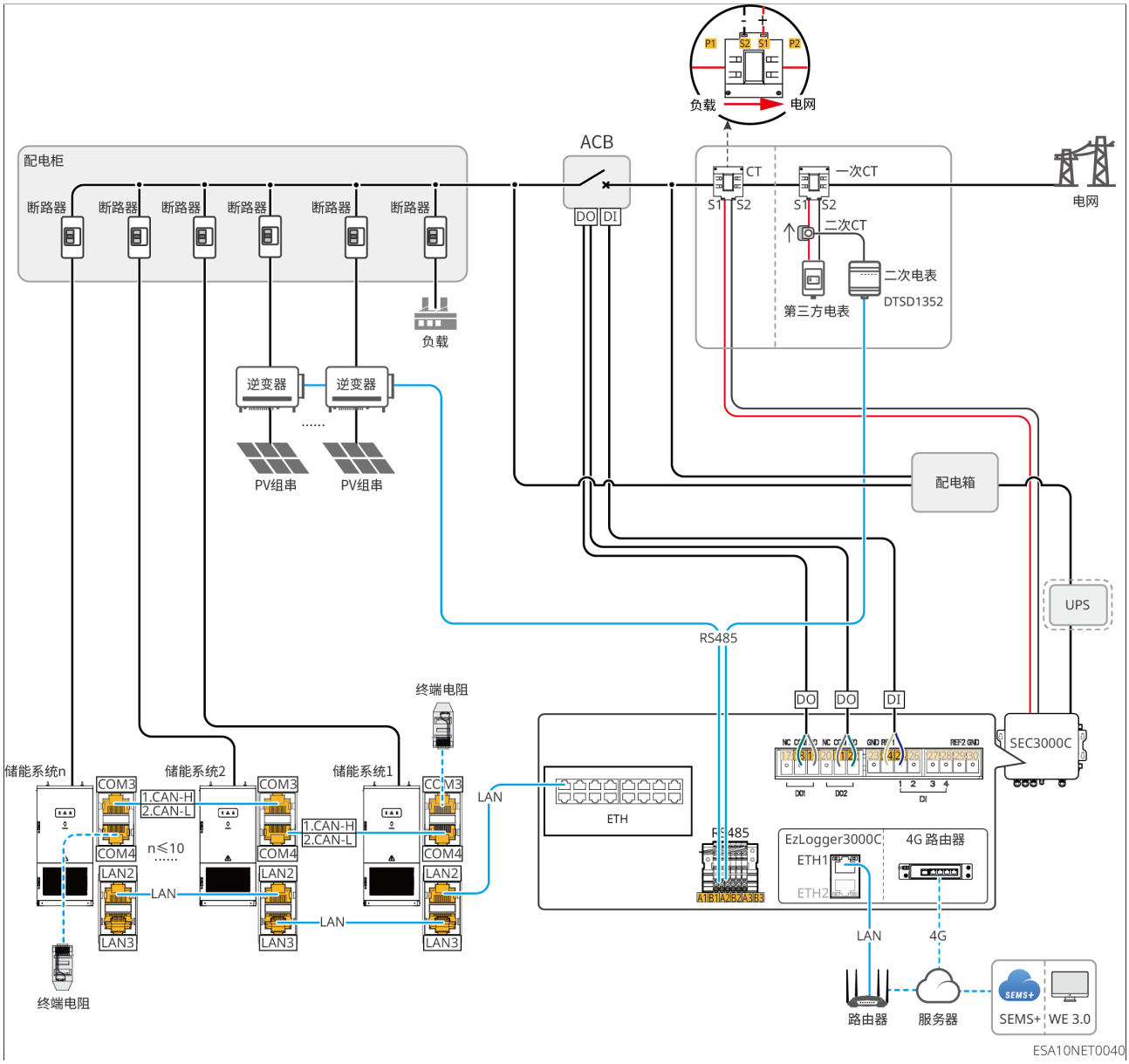

- **PV-storage-diesel On/Off-grid switching scenario (with MC synchronization)**

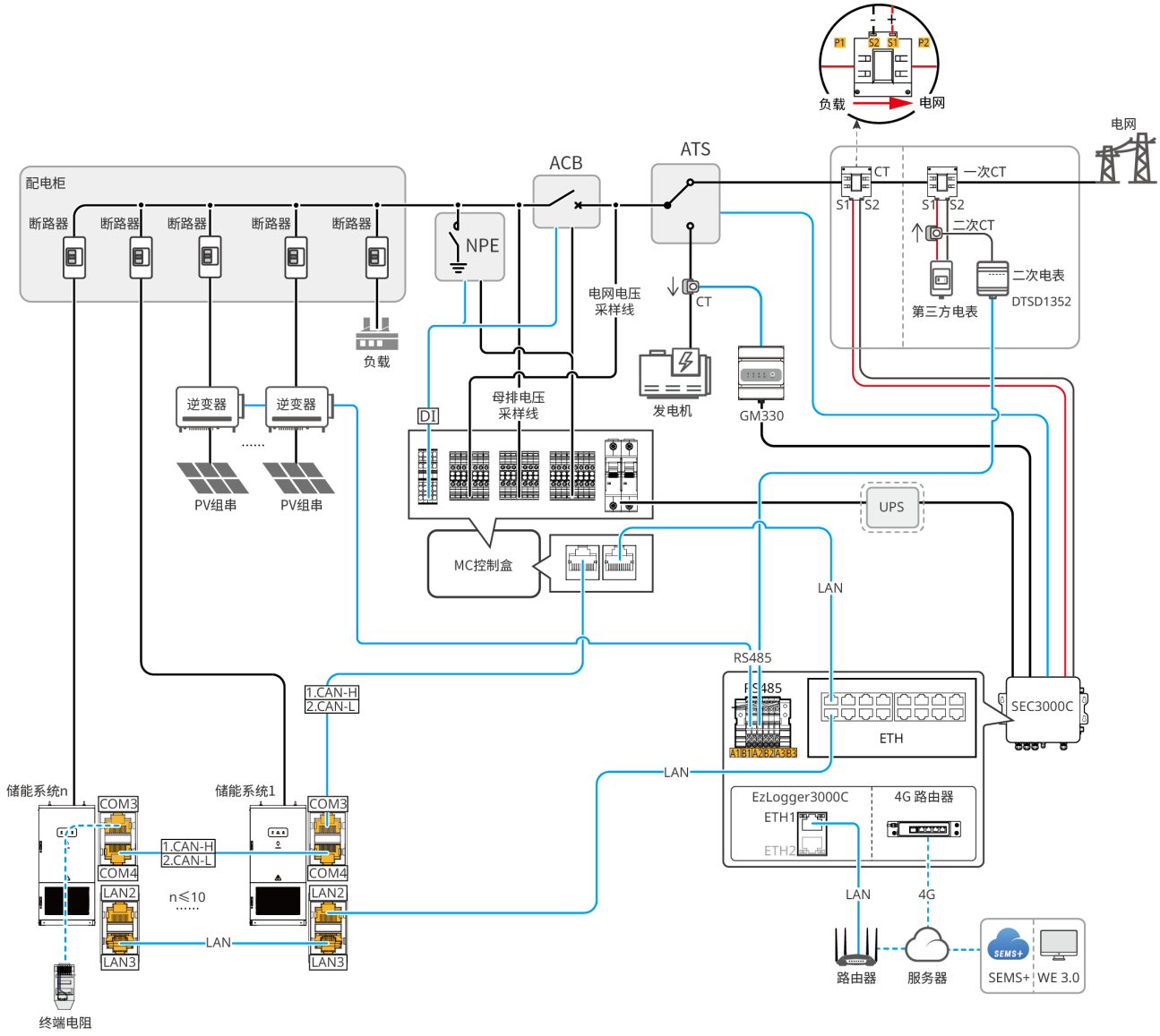

- **PV-storage pure off-grid scenario (daisy-chain wiring)**

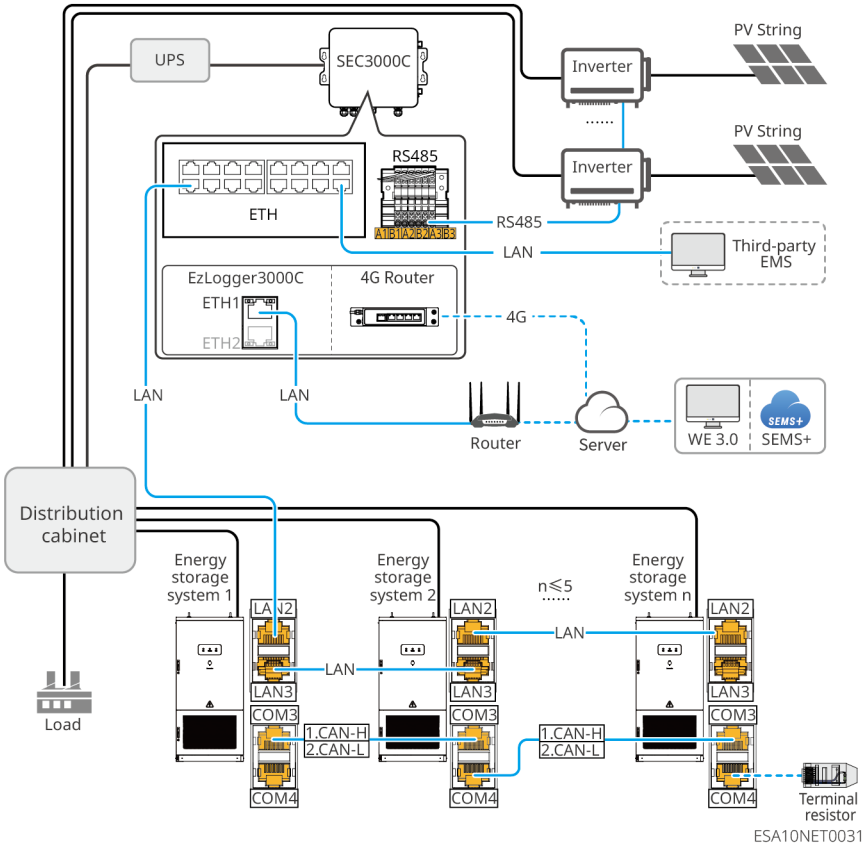

- **PV-Storage Pure Off-grid Scenario (Star Wiring)**

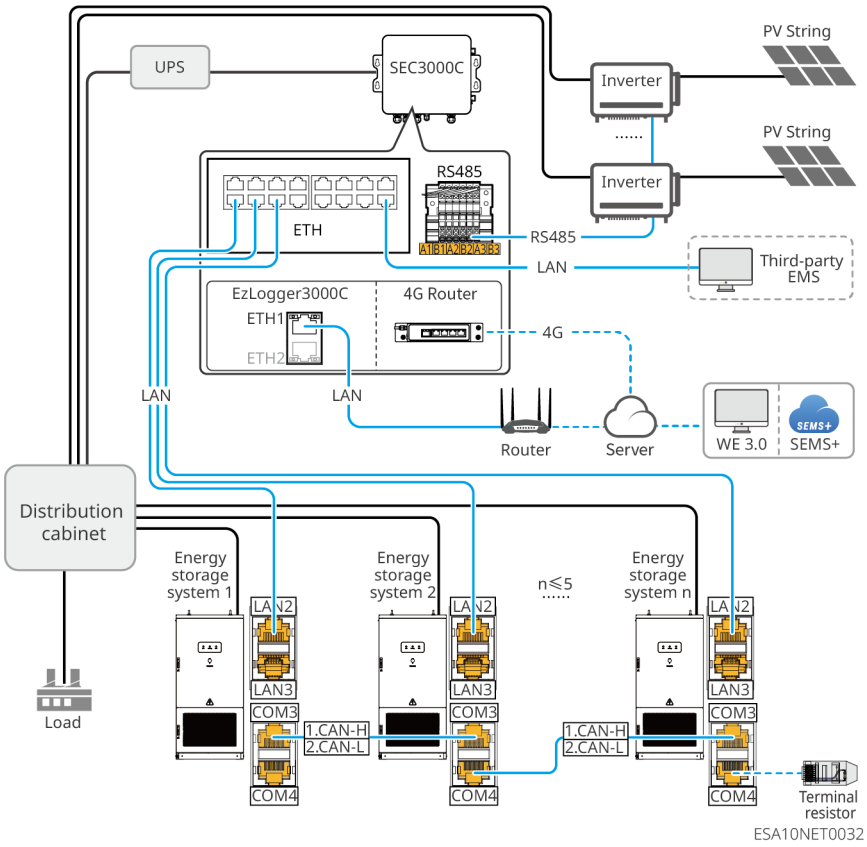

- **PV-Storage-Diesel Pure Off-grid Scenario (Daisy-chain Wiring)**

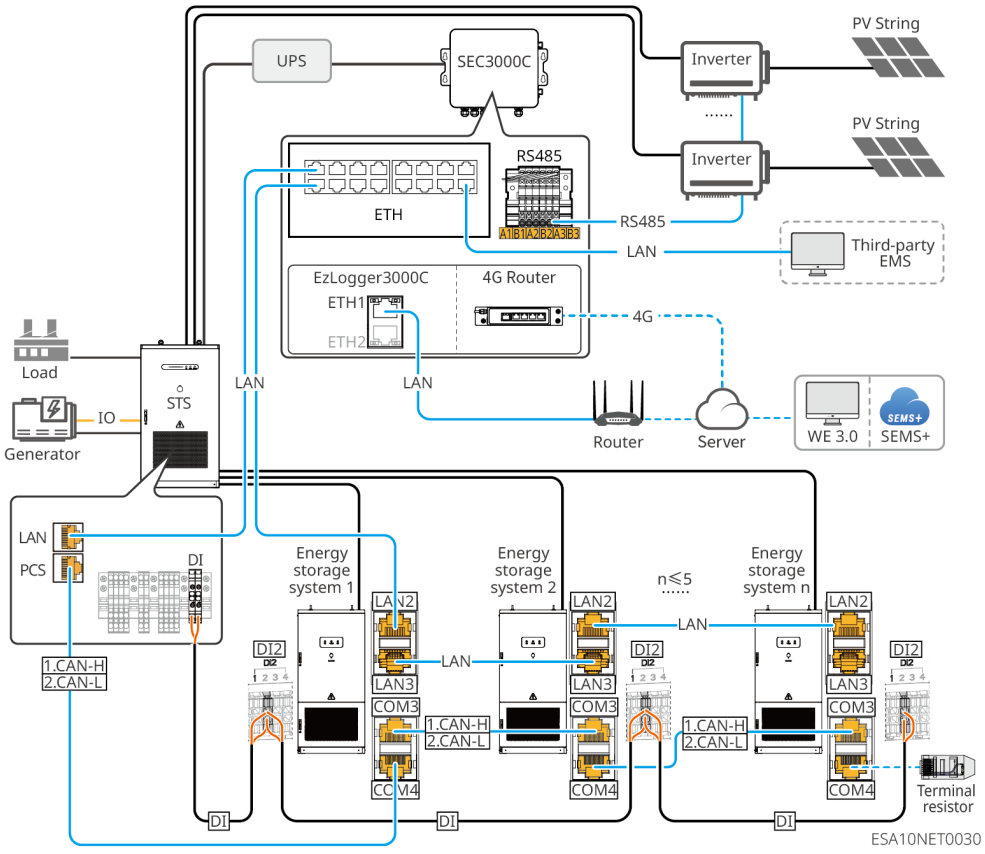

- **PV-Storage-Diesel Pure Off-grid Scenario (Star Wiring)**

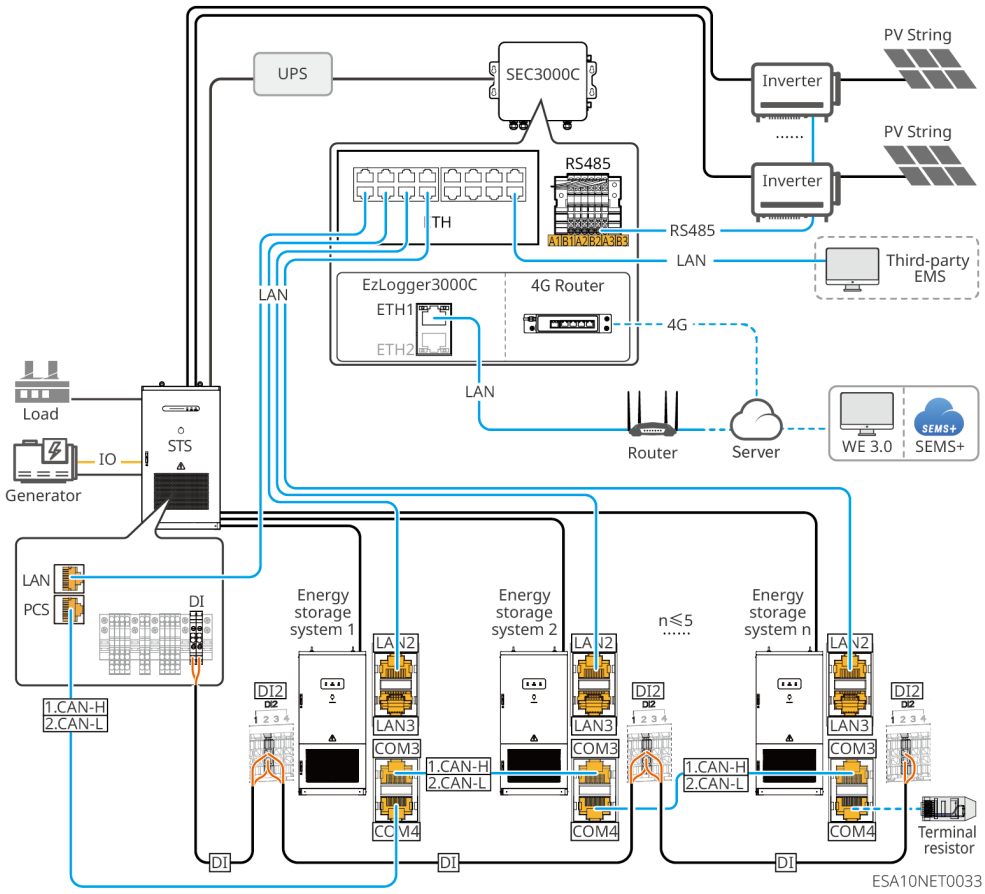

- **Pure Off-grid Scenario (with MC Synchronization)**

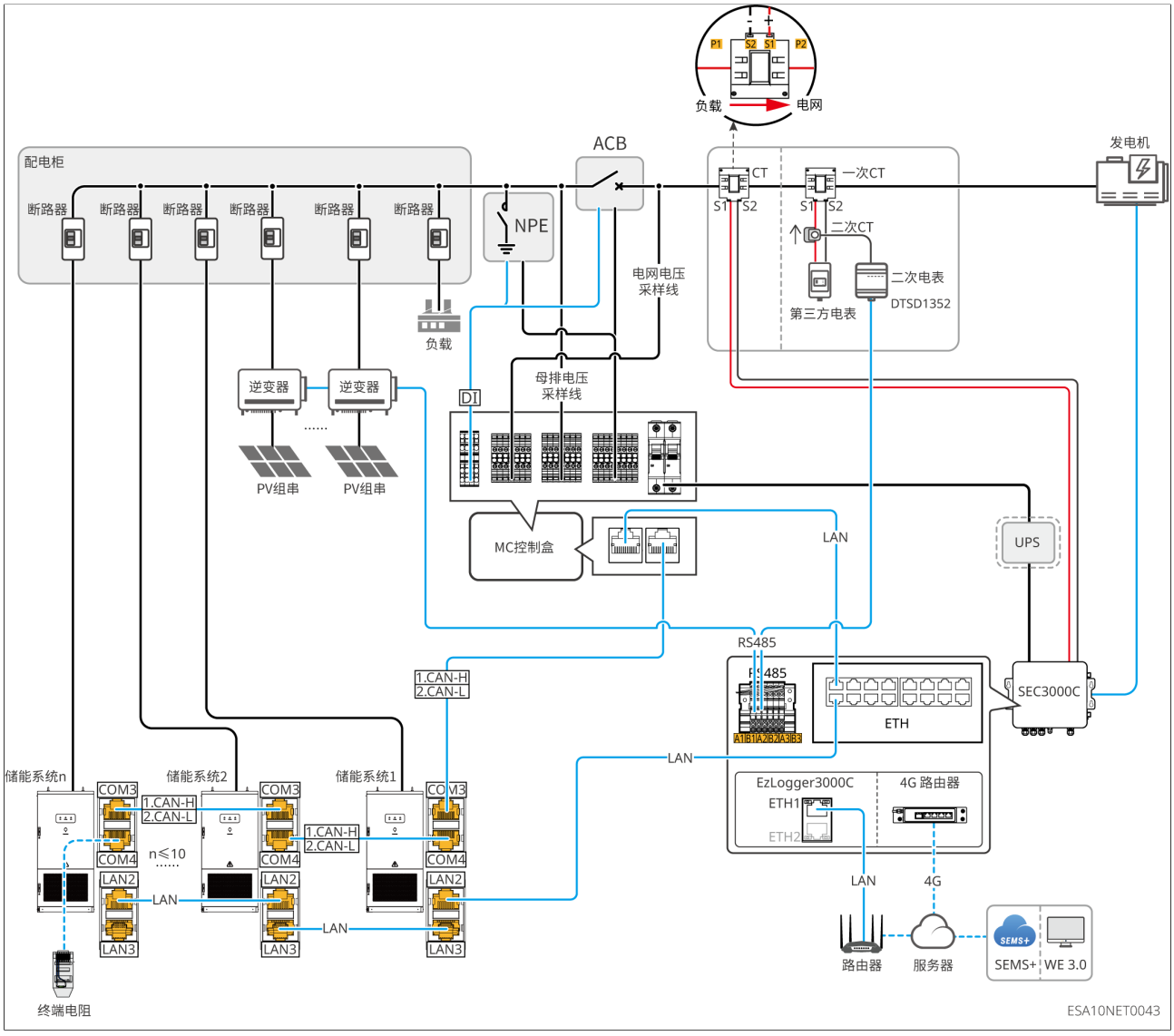

5.1.2 SEC3000C+ET100Kw Series Inverter

For more system information, please refer to[Inverter Solution User Manual]。

- **Parallel Grid-tied Scenario Type 1**

The Battery Type used is BAT 51.2–56.3 kWh, etc.

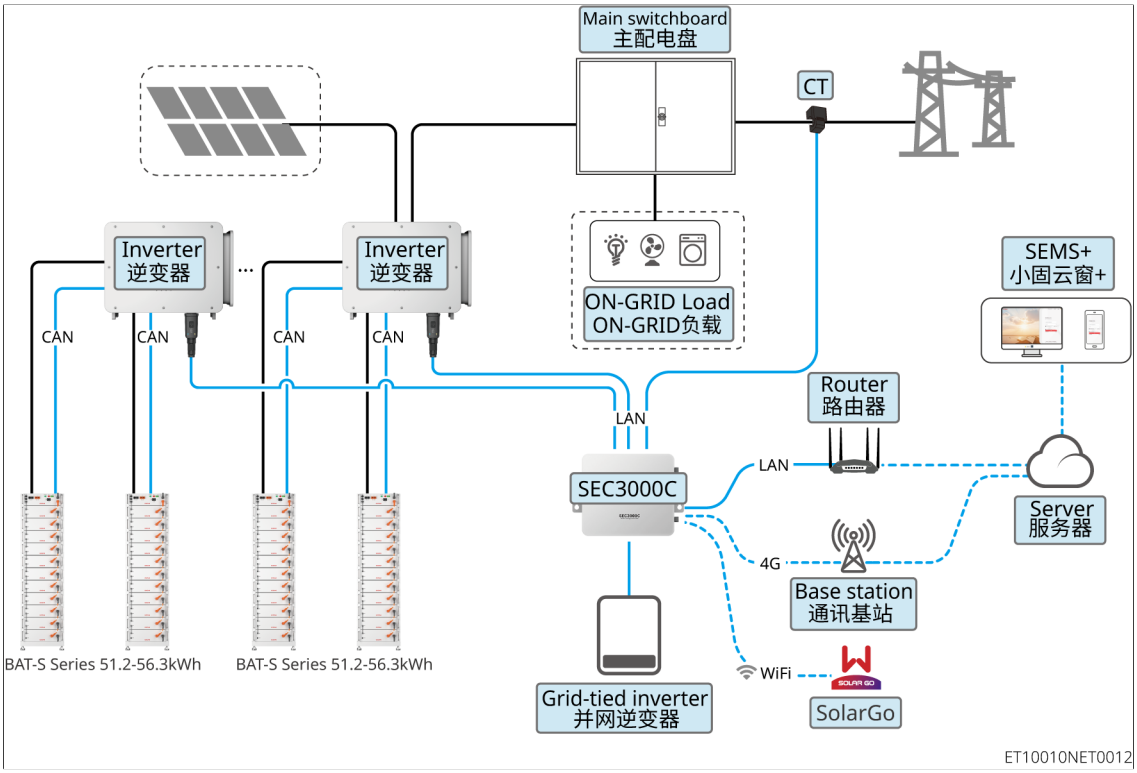

- **Parallel Grid-tied Scenario Type 2**

The Battery Type used isBAT 92.1–112.6 kWh, BAT-C 208.9 kWh, etc.

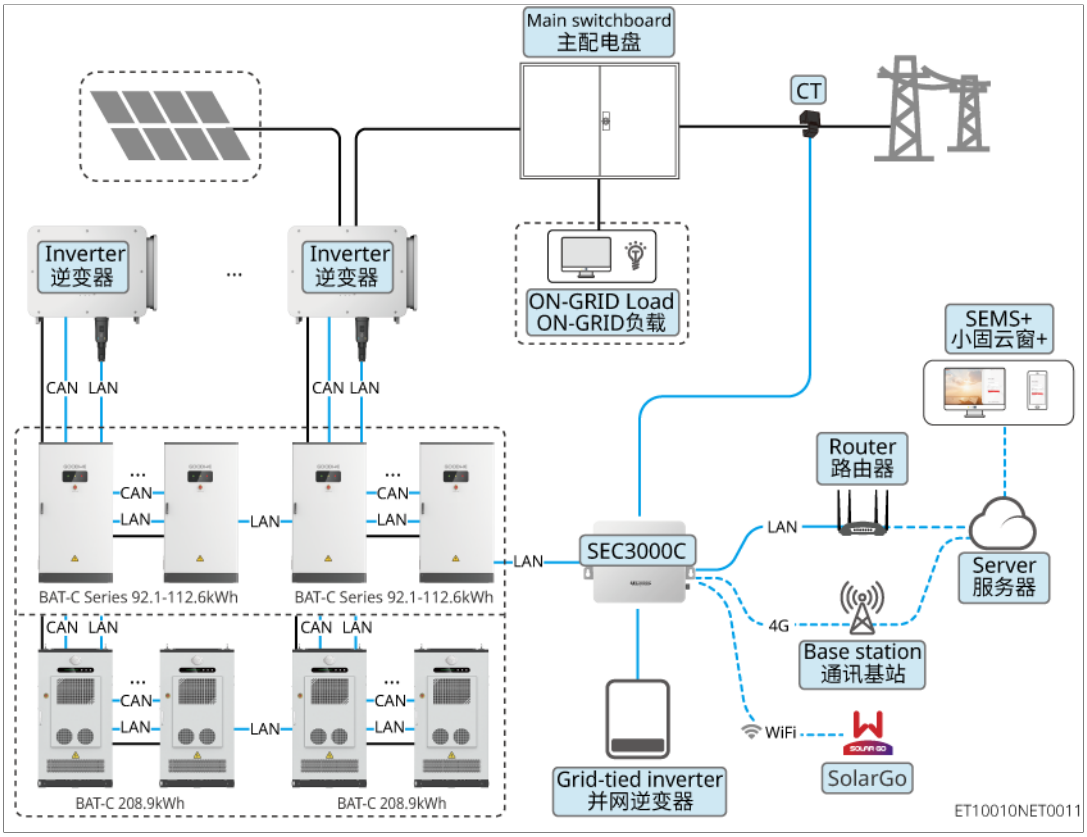

- **Parallel On/Off-grid Scenario Type 1**

The Battery Type used is BAT 51.2–56.3 kWh, etc.

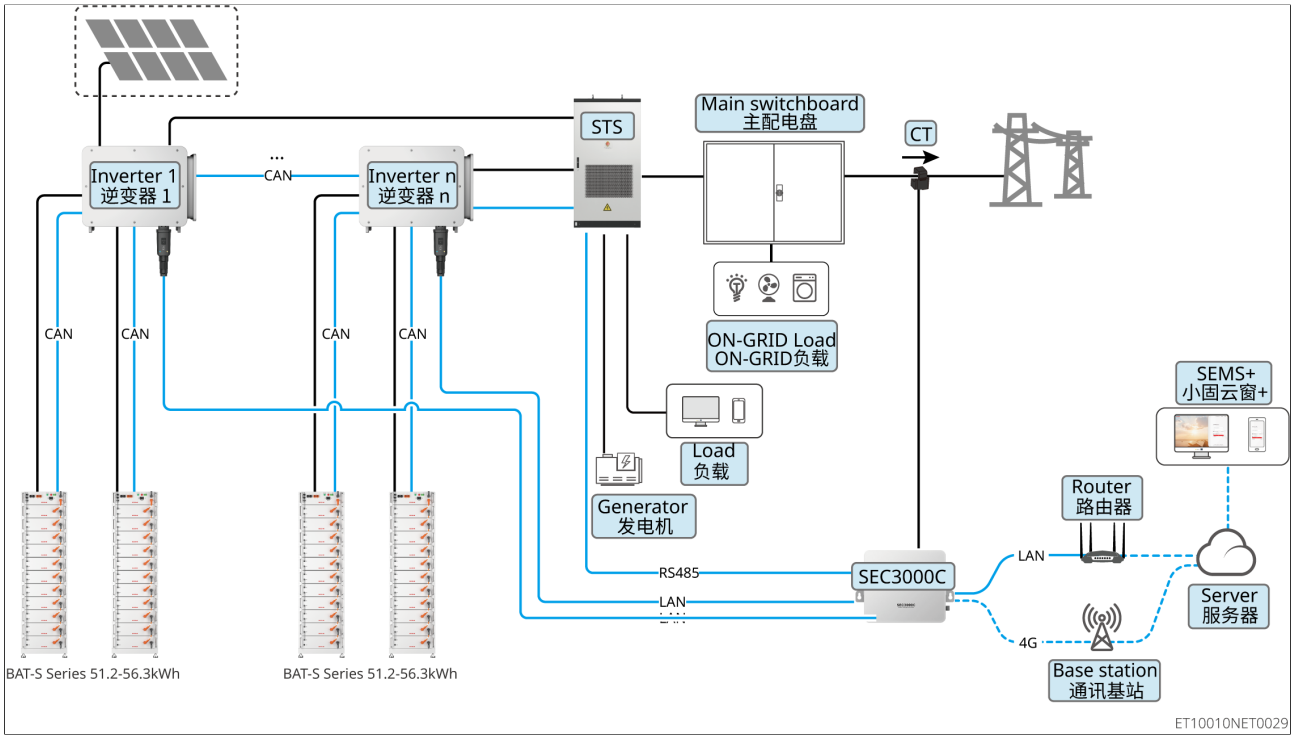

- **Parallel On/Off-grid Scenario Type 2**

The Battery Type used isBAT 92.1–112.6 kWh, BAT-C 208.9 kWh, etc.

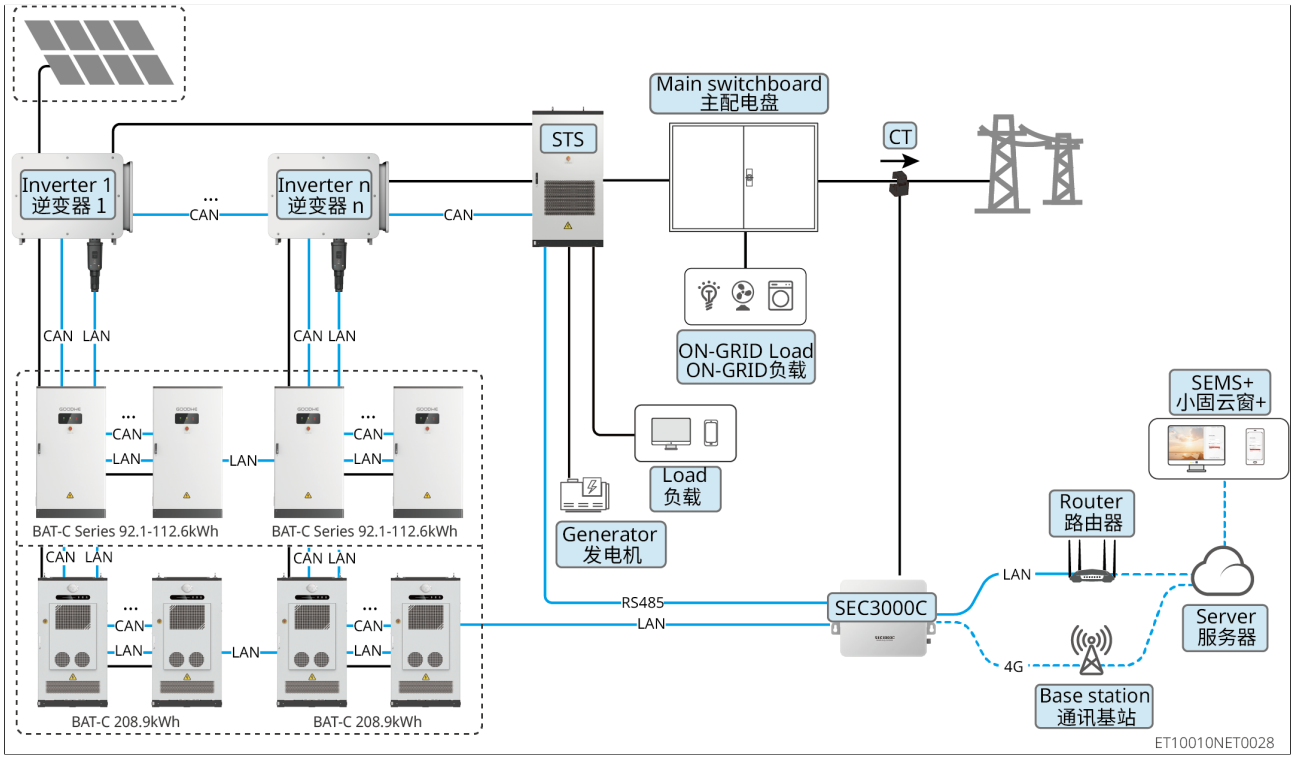

- **Single-unit Microgrid Scenario Type 1**

The Battery Type used is BAT 51.2–56.3 kWh, etc.

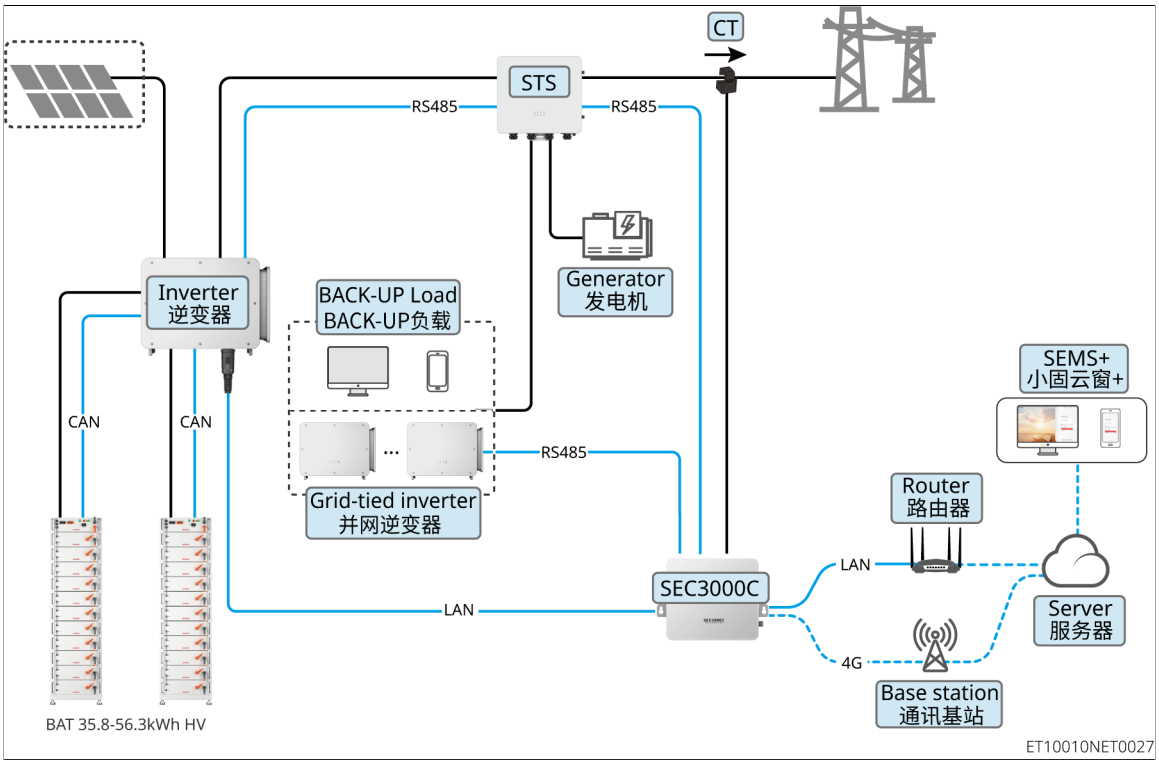

- **Single-unit Microgrid Scenario Type 2**

  The Battery Type used isBAT 92.1–112.6 kWh, BAT-C 208.9 kWh, etc.

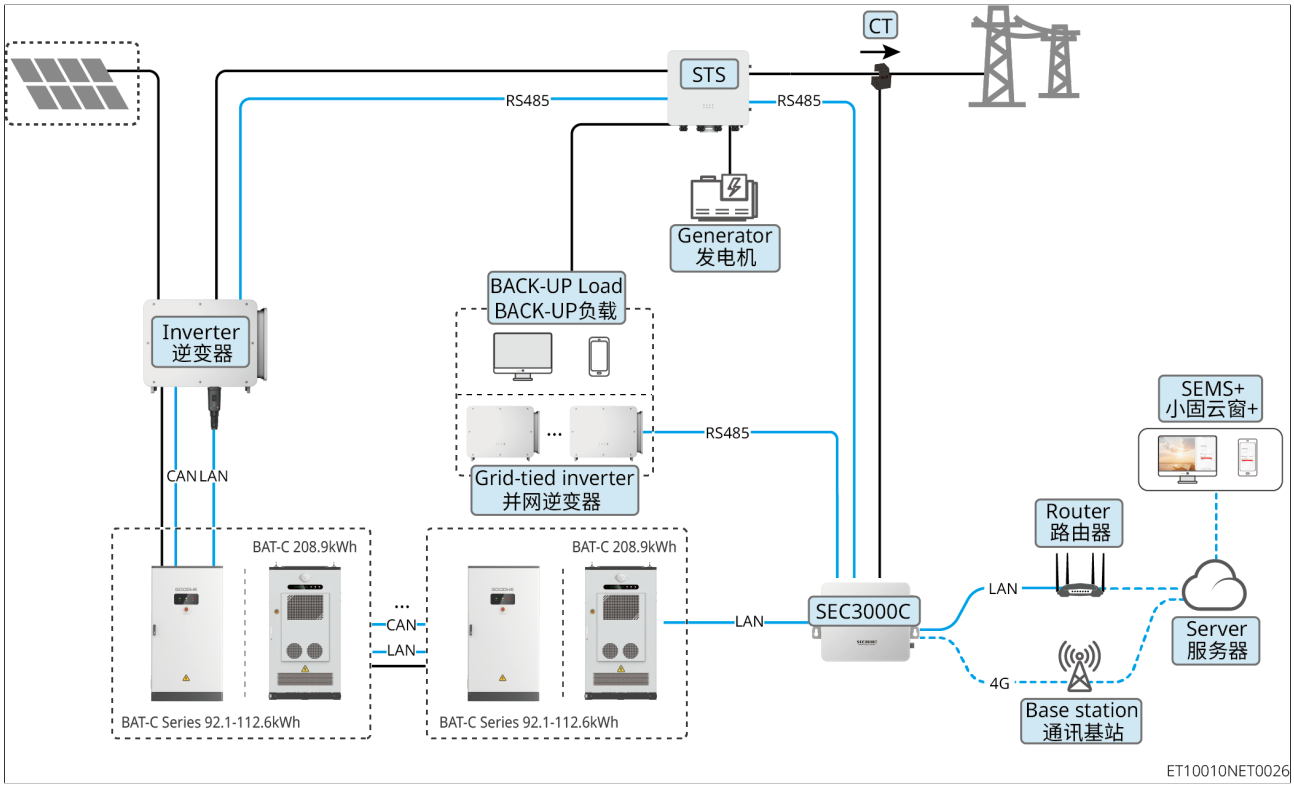

- **Parallel Microgrid Scenario Type 1**

The Battery Type used is BAT 51.2–56.3 kWh, etc.

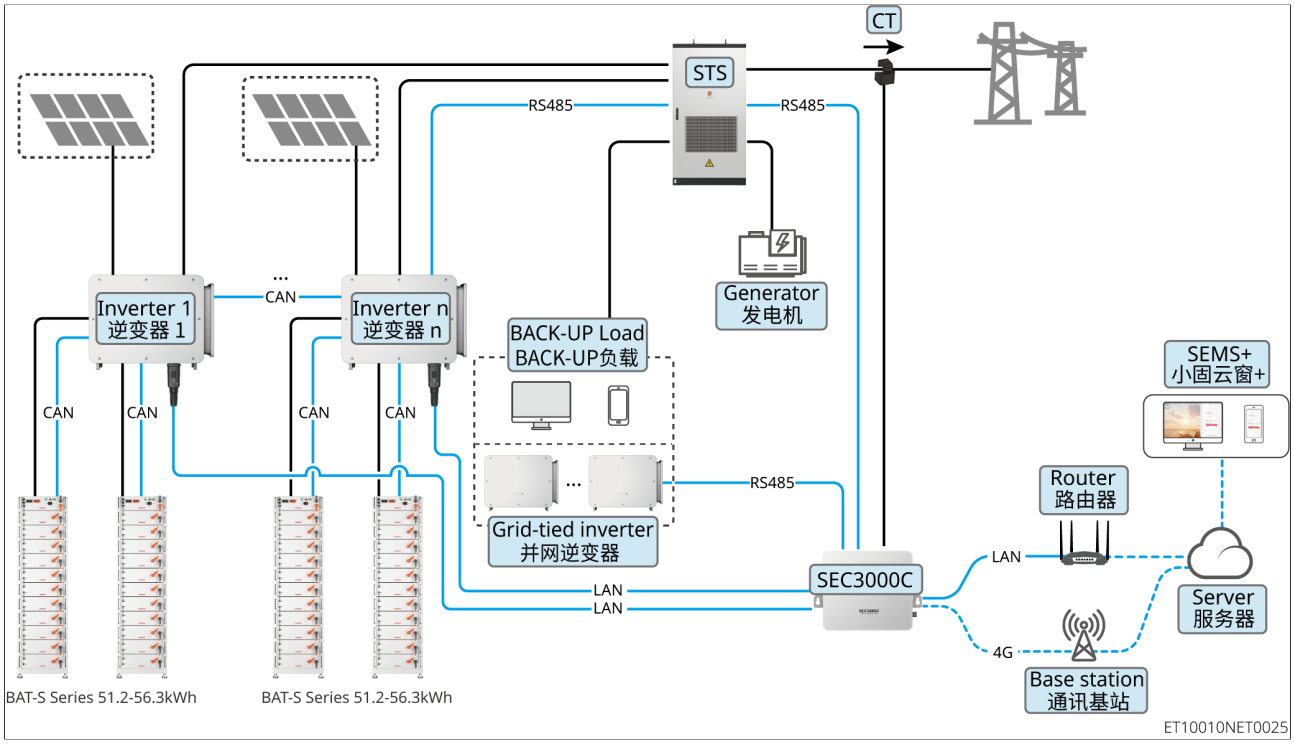

- **Parallel Microgrid Scenario Type 2**

The Battery Type used isBAT 92.1–112.6 kWh, BAT-C 208.9 kWh, etc.

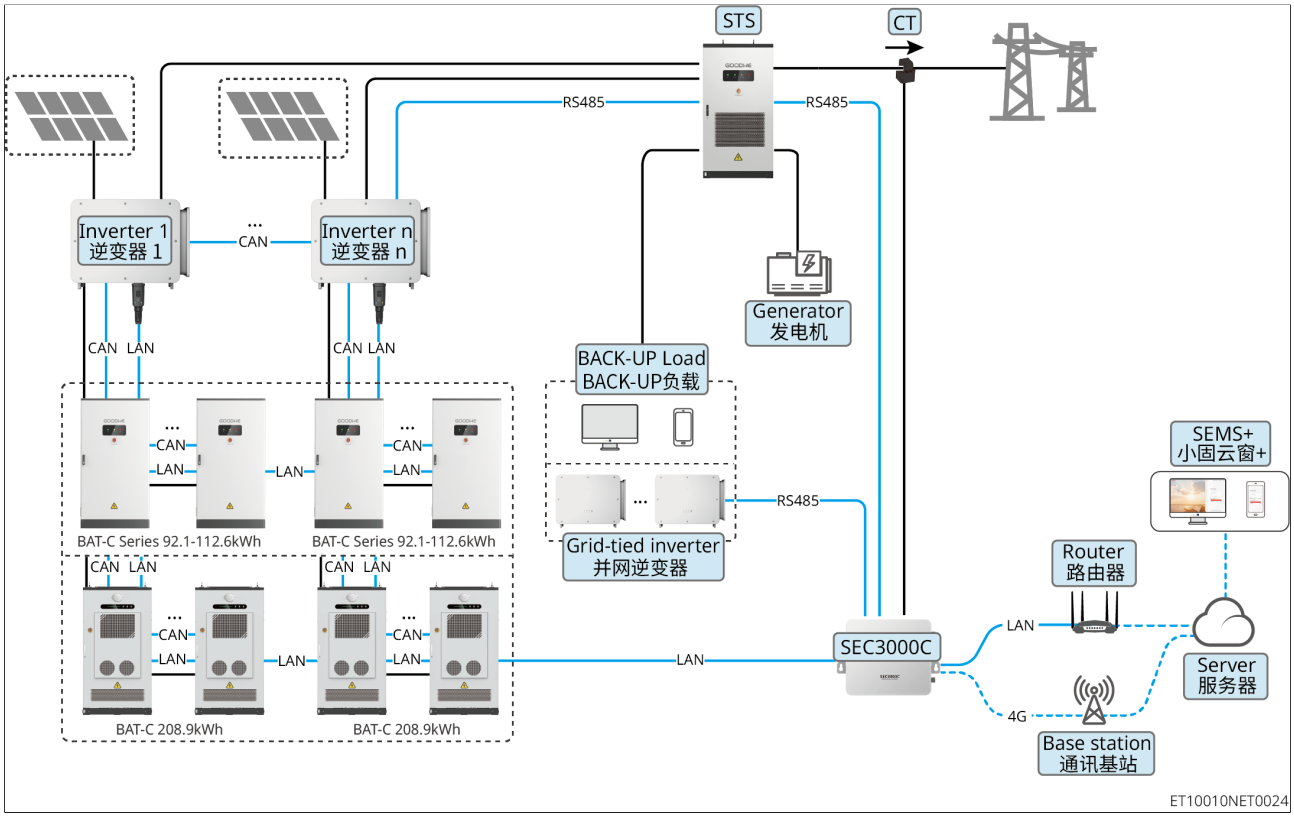

5.1.3 SEC3000C+ETR125Kw Series Inverter

For more system information, please refer to[Inverter Solution User Manual]。

Parallel Grid-tied Scenario

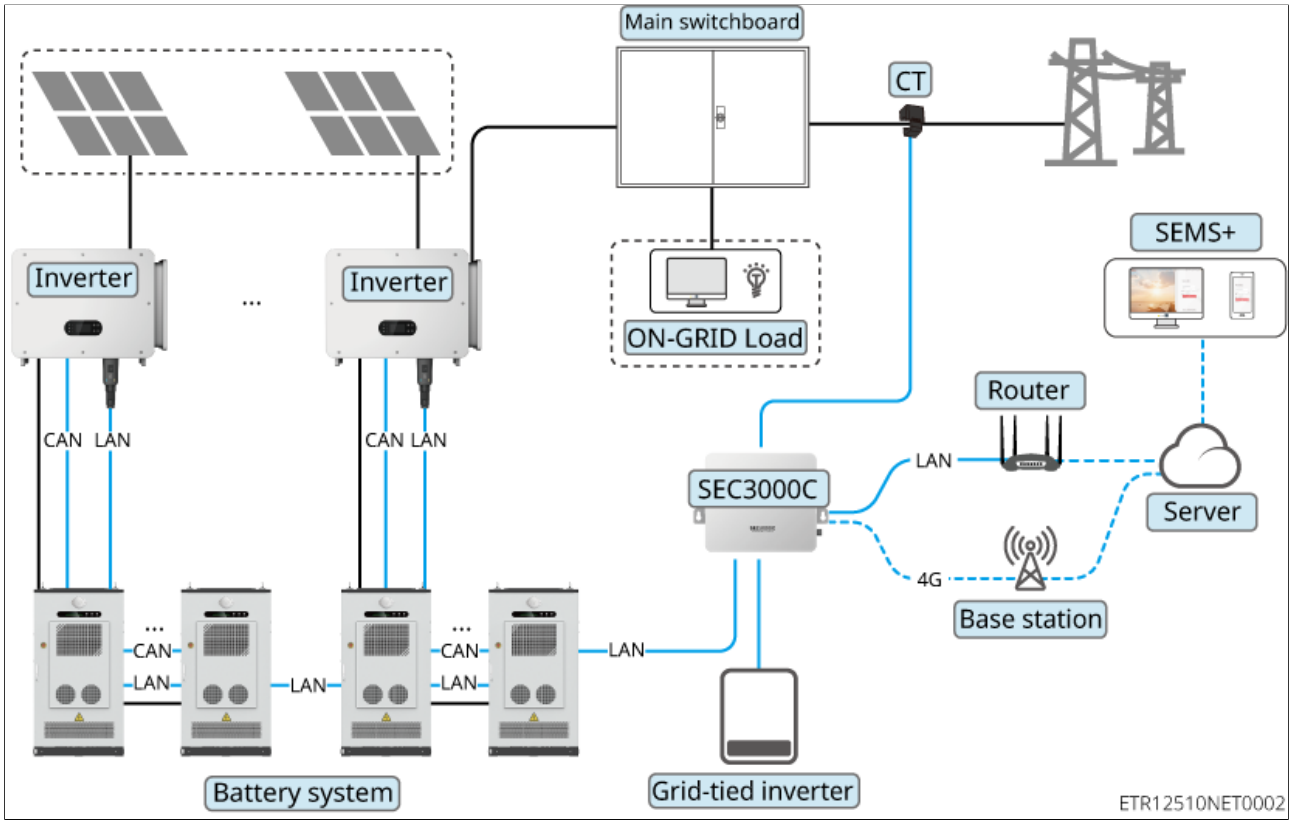

5.2 Pre-Wiring Preparation

Preparing cables

No.	Cable	Recommended specification	Procurement method
1	Protection ground cable	• Single-core outdoor copper cable • Conductor cross-sectional area: 2.5 mm^2–10 mm^2 • Cable outer diameter: 2.5–4.5 mm	User-supplied

No.	Cable	Recommended specification	Procurement method
2	Meter CT cable	• Single-core outdoor copper cable • Conductor cross-sectional area: 1.3 mm^2–2.3 mm^2 • Cable outer diameter: 2.0–3.0 mm	User-supplied
3	Single-phase AC cable	• Single-core outdoor copper cable • Conductor cross-sectional area: 2.5 mm^2–6.0 mm^2 • Cable outer diameter: 2.5–4.0 mm	User-supplied
4	Three-phase AC cable		User-supplied
5	RS485 communication cable for external devices	• Shielded twisted-pair cable compliant with local standards • Conductor cross-sectional area: 0.07 mm^2–1.3 mm^2 • Cable outer diameter: 1.0–2.5 mm	User-supplied
6	Ethernet cable for external devices	• Standard shielded Ethernet cable: CAT 5 or higher standard Ethernet cable and RJ45 connectors • Ethernet cable length must not exceed 100 m	User-supplied

Open the cabinet door and remove the wiring area baffle

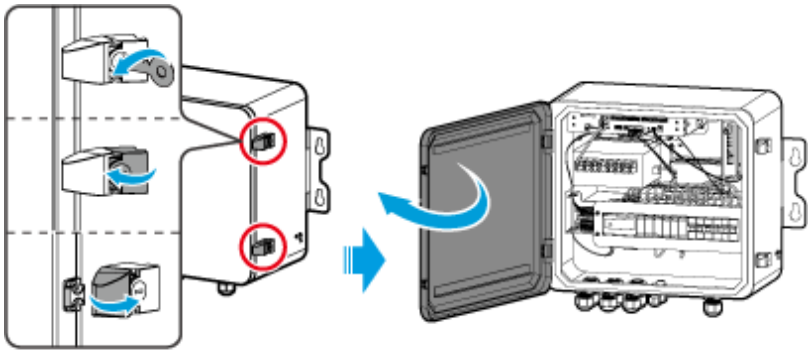

SEC30CINT0006

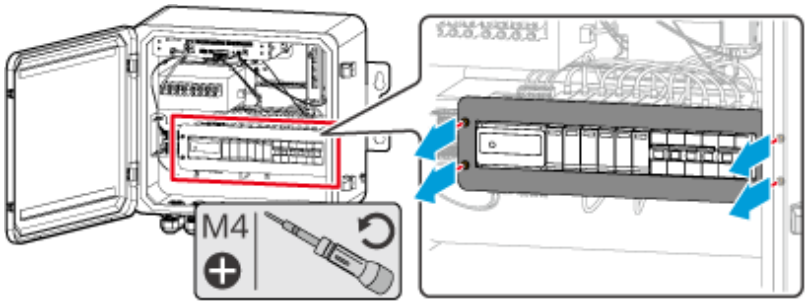

5.3 Connect the Protection Ground Wire

WARNING

- When installing the equipment, the Protection ground cable must be installed first; when removing the equipment, the Protection ground cable must be removed last.
- To improve terminal corrosion resistance, after the Protection ground cable is connected and installed, it is recommended to apply silicone gel or paint to the exterior of the grounding terminal for protection.

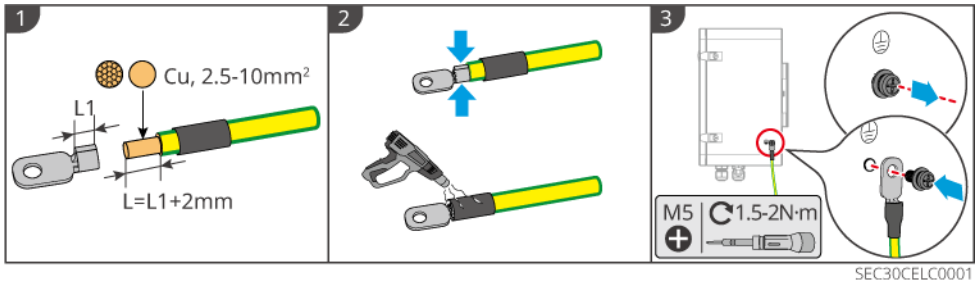

SEC30CELC0001

5.4 Connect Single-Phase AC Wires

NOTICE

Input Voltage Range: 100–240 Vac.

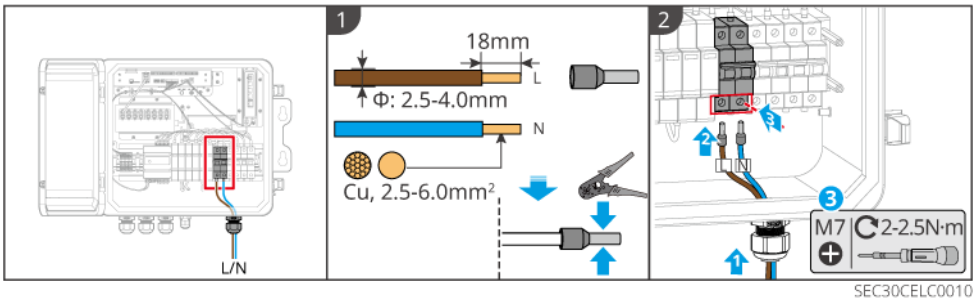

5.5 Connect Three-Phase AC Wires

NOTICE

- Supports connection to three-phase three-wire or three-phase four-wire systems. To connect a three-phase three-wire system, short-circuitL2andNports.
- If the built-inGM330meter in the control box is not used, the three-phase AC cable connection is optional.

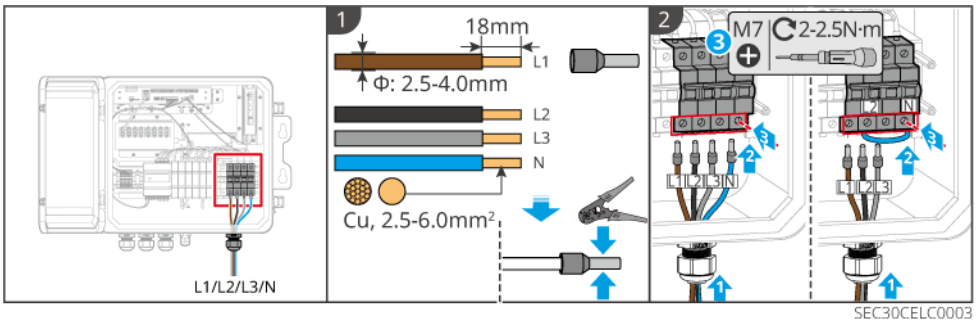

5.6 Connect the Meter CT Cable

WARNING

In areas with lightning hazards, if the meter cable length exceeds 10 m and the cable is not routed in grounded metal conduit, it is recommended to install external lightning protection devices.

NOTICE

- Only applicable toGM330meters; for third-party meters, refer to the corresponding meter manual requirements.
- Please purchase from GoodWe or prepare it yourselfCT。CT Transformation ratio requirements:nA/5A。
  - nA：CT primary-side input current,n is in the range of 200-5000
  - 5A：CT secondary-side output current
- Ensure that theCTconnection direction and phase sequence are correct; otherwise, monitoring data may be incorrect.
- The outer diameter of the AC power cable must be smaller than theCTaperture, ensuring that the AC power cable can pass through theCT。
- To ensureCTcurrent measurement accuracy, theCTcable length is recommended not to exceed30m。
- Do not use a network cable as theCTcable; otherwise, excessive current may damage the cable.
- TheCTprovided by the equipment manufacturer may vary slightly in size and appearance depending on the model, but the installation and wiring methods are the same.

Wiring method

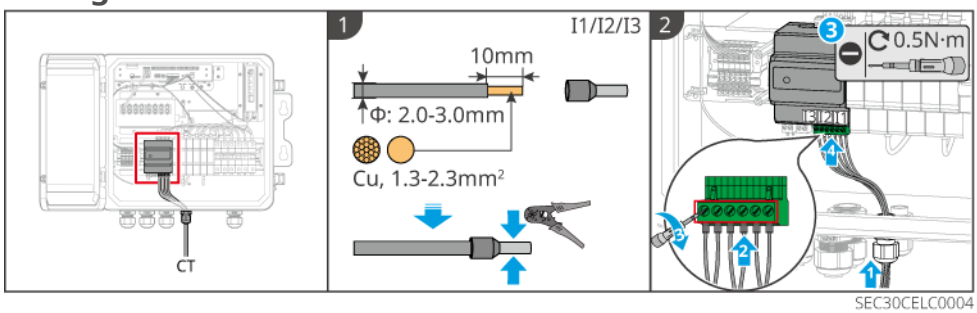

Installing the CT (Type 1)

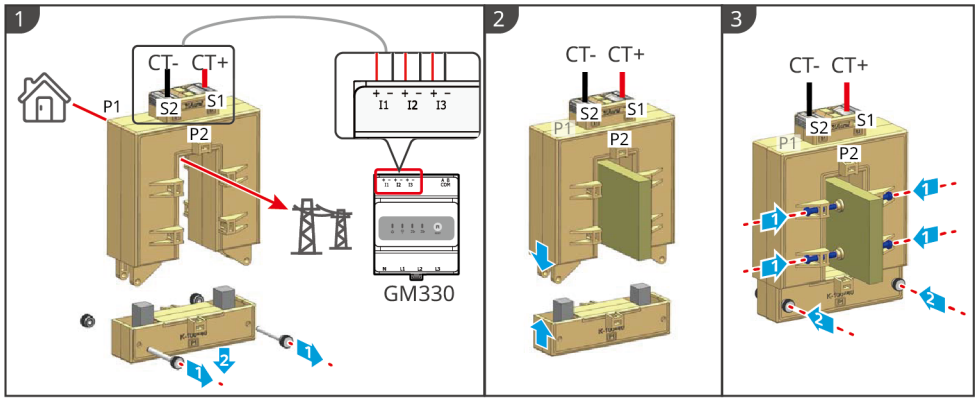

GMK10ELC0006

Installing the CT (Type 2)

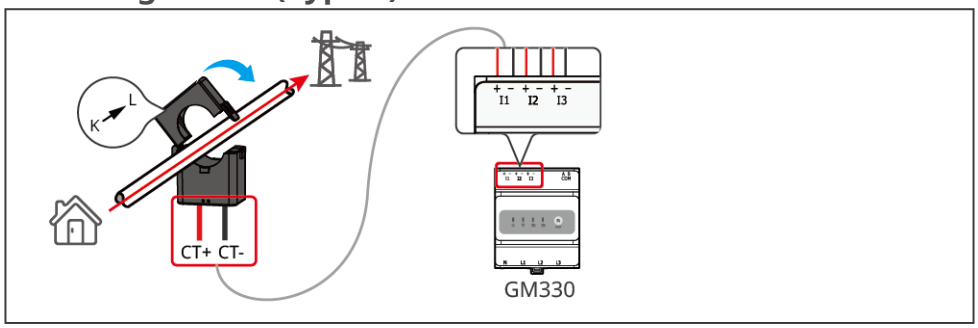

GMK10ELC0007

5.7 Connect RS485 Communication Cable

NOTICE

- Supports connection to grid-tied inverters, meters, STS On/Off-grid transfer cabinets, and other devices. Connect different devices according to system networking requirements.
  - For the grid-tied inverter models that can be connected, refer to the[Product Compatibility List]。
- OneRS485channel supports connection to a maximum of:20grid-tied inverters.
- The Smart Energy Control Box provides3groups of availableRS485connection terminals. Connect theRS485communication cable to any1group ofRS485terminals.

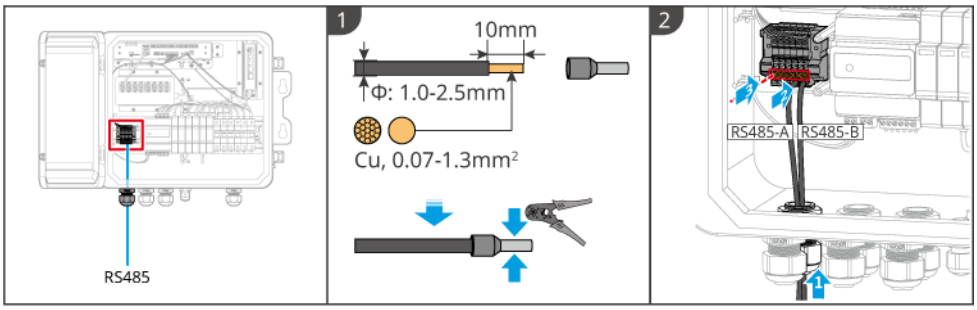

SEC30CELC0008

5.8 Connect Network Cable

NOTICE

- Supports connection to energy storage inverters, energy storage systems, batteries, STS On/Off-grid transfer cabinets, and other devices. Connect different devices according to system networking requirements.
  - If you need to connect an energy storage inverter through an Intelligent communication stick, prepare your ownWiFi/LAN Kit-20communication stick, and ensure that the communication stick version is not lower thanV2.5.49。
- Supports connection to a computer. After connecting the device to the computer using an Ethernet cable, you can log in to the embeddedwebfrom the computer to configure system-related parameters.
- When connecting the device to a computer using an Ethernet cable, if the computer only providesUSB、Type-Cand other ports, prepare an Ethernet port adapter.
- The Smart Energy Control Box provides15available Ethernet ports. Connect the Ethernet cable to any port according to actual requirements.

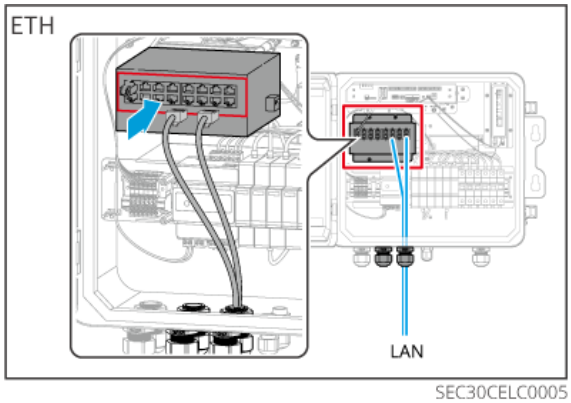

SEC30CELC0005

5.9 Install 4G Antenna (Optional)

NOTICE

- If the GoodWe 4G router is selected as an option, the 4G router is pre-installed at the factory.
- Routers from other manufacturers are supported as options; if selected, install the 4G router yourself.
- If you need to install a 4G antenna extension cable, do not place the extension cable crossing other communication cables; otherwise, the signal may be affected.
- The SIM card must be provided by the user. Use a standard SIM card (size: 25 mm × 15 mm, capacity ≥64 KB) or a NANO SIM card (size: 12 mm × 9 mm, capacity ≥64 KB) according to the actual size of the card slot.
- Recommended data plans are as follows:
  - When there are N grid-tied inverters in the system, the recommended data plan is 200 + 100*N MB/month.
  - When there are N energy storage systems in the system, the recommended data plan is 200 + 600*N MB/month.
  - When there are M grid-tied inverters and N energy storage systems in the system, the recommended data plan is 200 + 100*M + 600*N MB/month.

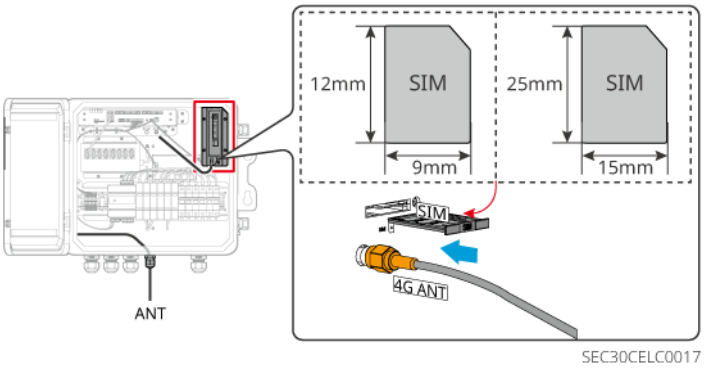

5.10 Connect DO/DI/AI/PT Cables

NOTICE

- The Smart Energy Control Box has a built-in data logger. To implement functions such asRCR, one-click shutdown, or to connect external devices such as temperature sensors, connect the corresponding cables.
- The Smart Energy Control Box reservesDI/DO/AI/PTcable entry holes. If you need to connect the corresponding cables, route them through the reserved cable entry holes.
- If you need to provide your own4Grouter, connect it to the data logger's24VDC output port to supply power input to the router.
- For corresponding cable requirements and specific wiring steps, refer to EzLogger3000C User Manual。

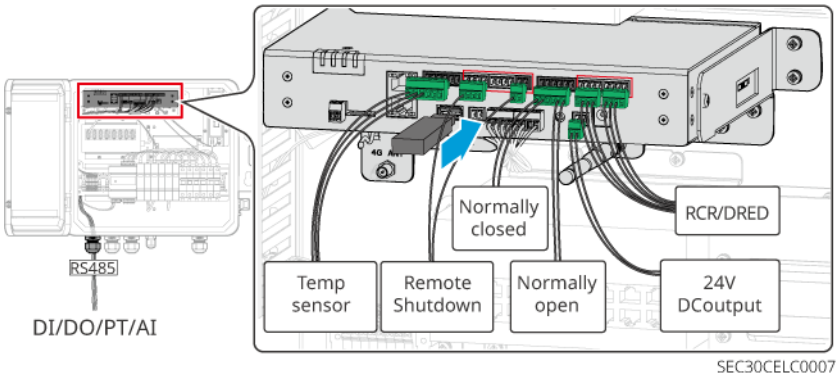

6 System Trial Operation

6.1 System Pre-Power-on Inspection

No.	Check Items
1	The equipment is installed securely; the installation position facilitates operation and maintenance; the installation space facilitates ventilation and heat dissipation; and the installation environment is clean and tidy.
2	Protection ground cable, AC input cable, and communication cable are connected correctly and securely.
3	Cables are bound in compliance with routing requirements, reasonably distributed, and free of damage.
4	Ensure waterproof covers are installed on unused cable entry holes.
5	Ensure used cable entry holes are sealed.

6.2 System Power-On

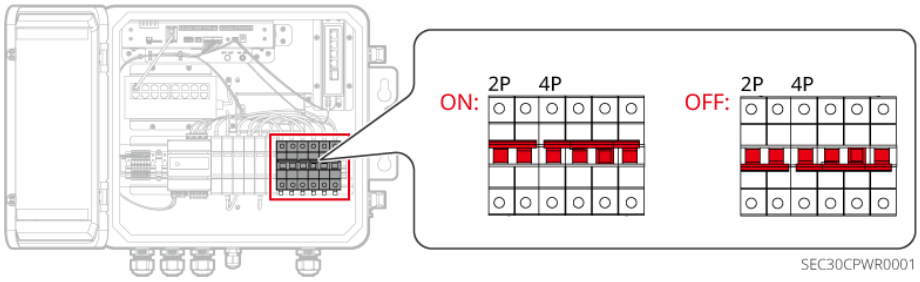

6.3 Indicator Light Description

Please check the LED indicators of the built-in data logger and Intelligent meter of SEC3000C.

Data collector

The indicator description applies only to SEC3000C with software version 06 or later.

Indicator	Indicator status	Description
PWR		Green LED steady on: device power supply is normal。
		Green LED off: device is powered off or power supply is abnormal。
RUN		Green LED steady on/off: device operating abnormally.
		Green LED flashes slowly: The device is operating normally.
NET		Green LED steady on: The device is connected to the server normally.
		Green LED flashes quickly: The device is connected to the router, but the server connection is abnormal.
		Green LED flashes slowly: The device is Not Connected to the router.
ALM		Red LED steady on: The device has a fault.
		Red LED flashes quickly: The device is being upgraded.
		Red LED off: The device has no fault.

Intelligent electricity meter

Type	Status	Description
Power LED 	Steady on	The meter is powered on, with no RS485 communication.
	Flashing	The meter is powered on, and RS485 communication is normal.
	Off	The meter is powered off.
	Off	A reserved

Type	Status	Description
Communication LED	Flashing	Press and hold the Reset button for ≥5 s; the Power LED and Buy/Export Energy LED flash: The meter is reset.
Buy/Export Energy LED	Steady on	Purchase electricity from the grid.
	Flashing	Export Energy to the grid.
	Off	No electricity purchase and no Export Energy.
	A reserved	

6.4 Close Cabinet Door

Install the wiring area baffle and close the cabinet door.

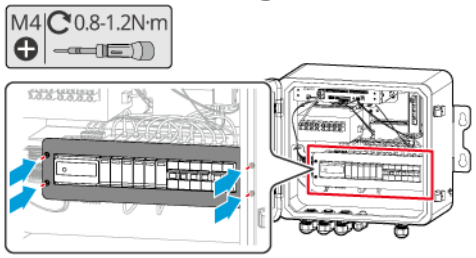

SEC30CINT0008

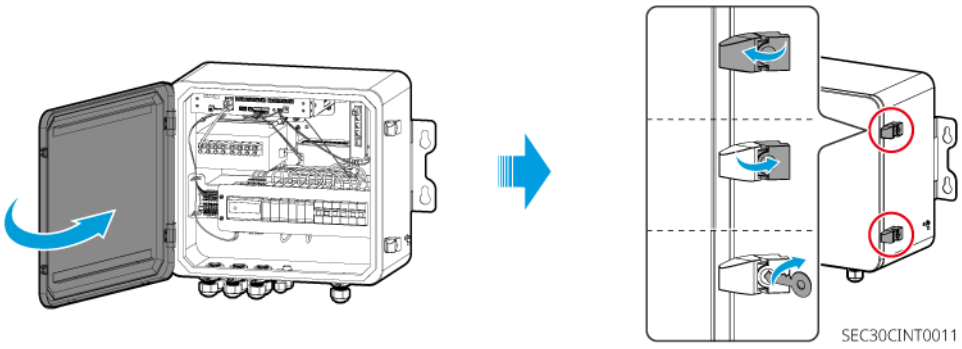

SEC30CINT0011

7 System Commissioning

7.1 WEB Interface Introduction

The device supports setting relevant parameters through the local WEB interface and viewing device operating information and error information to keep informed of system status in a timely manner.

WARNING

- The WEB software version corresponding to the interface images in this document is V7.10.19。 Images are for reference only; the actual product shall prevail.
- Parameter names, ranges, and default values may be changed or adjusted later; the actual display shall prevail.
- Because the types of devices connected to the system differ, thewebconfigurable items differ; the actual display shall prevail.
- When reset, shutdown, or upgrade commands are issued to the inverter, the inverter may be disconnected from the grid, affecting Energy Generation.
- The grid parameters, Protection parameters, characteristic parameters, and power regulation parameters of grid-tied inverters, as well as safety parameters such as frequency parameters, connection parameters, and Protection parameters of energy storage inverters, must be set by professionals. Incorrect safety parameter settings may cause the inverter to fail to connect to the grid or connect to the grid not in accordance with grid requirements, affecting Energy Generation.

7.1.1 WEB Interface Layout

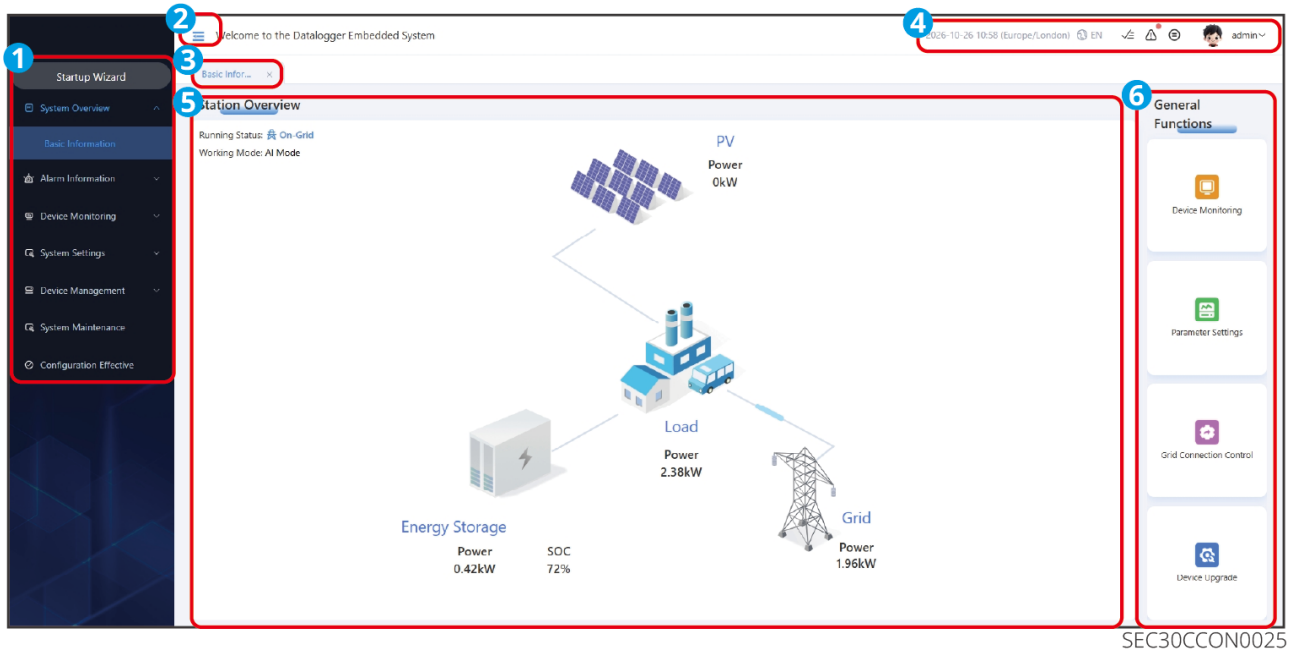

SEC30CCON0025

No.	Functional Area	Description
1	Menu List	• Interface menu area. You can select a first-level menu as needed; after selection, the second-level menu can be displayed. Some first-level menus do not have second-level menus. • On the user's first login, the interface prompts you to perform Quick Configuration of the system through the startup wizard. After closing it, if you need to enter the startup wizard interface again, click to enter.
2	Menu List Button	Click the Menu List button to expand or collapse the menu list.
3	Tab	Displays the tabs of opened menus.
4	System Status	• Displays the system time. • Switch the system language. • Display alarm information; click to view real-time fault alarms. • Display product version information. • Display account login information; click to log out of the account.

No.	Functional Area	Description
5	Plant Overview	Current plant energy flow diagram and power information.
6	Common Functions	Displays common setting functions; click to navigate to the corresponding settings screen.

7.1.2 WEB Interface Menu

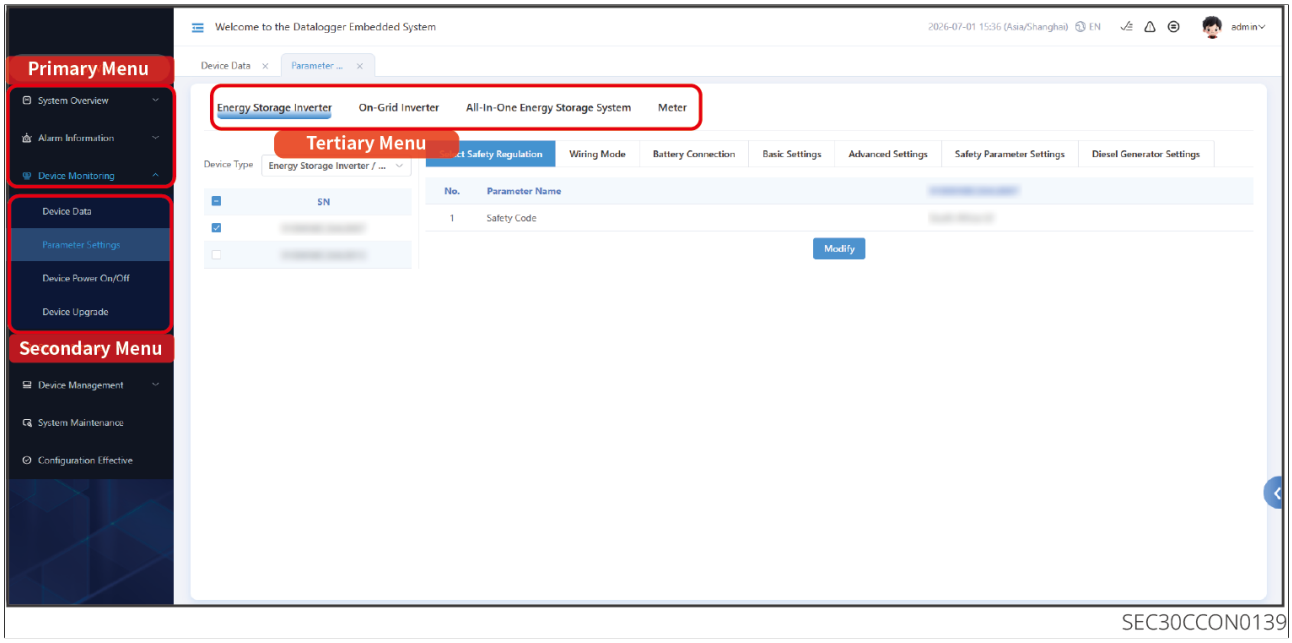

SEC30CCON0139

Level-1 Menu	Level-2 Menu	Level-3 Menu	Description
Commissioning Wizard	-	-	Quickly perform networking and set device parameters to complete the basic configuration for system operation.

Level-1 Menu	Level-2 Menu	Level-3 Menu	Description
System Overview	Basic Information	-	• Display PV Energy Generation, system installed capacity, and other information. • Set common functions, such as Device Monitoring, parameter settings, grid connection control, and device upgrade. • Display the plant operation energy flow diagram. • Display energy storage daily charge/discharge energy, historical charge/discharge energy, and other information.
Alarm Information	Real-time Alarms	-	Display fault alarm name, device SN, and generation time. Click the manual refresh button to refresh and display the latest alarm list.
	Historical Alarms	-	Display historical fault alarm information. Supports query by device and time period.
Device Monitoring	Device Data	-	• View the operating status of devices in the system, deviceSN, version, real-time data, and other information. • Currently supports viewing grid-connected inverters, energy storage inverters (including batteries), integrated energy storage cabinets, meters, and other devices.

Level-1 Menu	Level-2 Menu	Level-3 Menu	Description
	Parameter Settings	Energy Storage Inverter	Set energy storage inverter parameters. • Quick Configuration: Quickly configure the safety country and battery Access Mode of the energy storage inverter. • Wiring Mode: Set the inverter wiring mode. • General Data: Set basic parameters of the energy storage inverter. • Advanced Settings: Set advanced parameters of the energy storage inverter. • Safety Parameter Settings: Set advanced safety parameters of the energy storage inverter. • Generator Settings: Set the parameters of the generator connected to the inverter.
		Grid-Tied Inverter	Set the grid parameters, Protection parameters, characteristic parameters, and power regulation parameters of the grid-tied inverter.
		All-in-One Energy Storage Cabinet	Set the parameters of the integrated energy storage cabinet. • Select Grid Code: Quick Configuration of the grid code country for the integrated energy storage cabinet. • General Data: Set the General Data of the integrated energy storage cabinet. • Advanced Settings: Set the advanced parameters of the integrated energy storage cabinet. • Grid Code Parameter Settings: Set the advanced grid code parameters of the integrated energy storage cabinet.

Level-1 Menu	Level-2 Menu	Level-3 Menu	Description
		STS	Set STS parameters. Only applicable to some STS models.
		meter	Set meter parameters, such as CT ratio, PT ratio, and wiring mode.
System Settings	Grid Connection Control	Operating Mode	Set the system operating mode. Currently, local management mode or Third-Party Dispatch Mode is supported.
		SOC Management	Set the systemSOC charge/discharge limits.
		Grid-connected Power Limit	Set the system grid-connected power limit.
		Demand Management	Set the Demand Control Mode.
		Capacity Management	Set system capacity management.
		Communication Fault Protection	Set the handling measures for communication exceptions with the inverter/ESS/meter.
	Micro-grid Control	-	Applicable to micro-grid systems. Set micro-grid system parameters, such as Micro-grid Control scenarios, Diesel Generation Control parameters, load control parameters, black start, etc.

Level-1 Menu	Level-2 Menu	Level-3 Menu	Description
	DO Control	RCR	Applicable to Germany and other regions, setRCRparameters.
		DRED	Applicable to Australia and other regions, set DRED parameters.
	Dispatch Control	Reactive Power Control	Set the Power Factor target parameters.
		Three-phase Unbalance Control	Enable or disable the three-phase unbalance function.
		Remote Shutdown	Set remote shutdown parameters. NS Protection shutdown is only applicable to Germany.
Device Management	Device Networking	-	Set the system networking.
	Device Access	-	Add grid-tied inverters, energy storage inverters, all-in-one energy storage cabinets, meters, and other devices.
	Port Settings	LAN Configuration	Configure LAN communication parameters.
		WiFi Configuration	Set the Wi-Fi password of the control box.
		RS485 Configuration	Configure RS485 parameters. Supports connecting third-party devices via RS485.

Level-1 Menu	Level-2 Menu	Level-3 Menu	Description
	Forwarding Configuration	Modbus-TCP	Set Modbus-TCP forwarding parameters.
	Device Upgrade	Data Logger	Upgrade the firmware version of the data collector.
		Grid-Tied Inverter	• Upgrade the device firmware version. • Supports upgrading the DSP version, ARM version, module version, etc.
		Energy Storage Inverter	
		All-in-One Energy Storage Cabinet	
		STS	
		Battery System	
	Device Power on/Off	-	Manually start/stop all or some devices.
	Device Log	-	View device operation logs, such as logging in/out of the web and changing the password.
	System Time	-	Set the system time synchronization clock source. Currently supported sources include GoodWe cloud platform time synchronization,NTP、Modbus-TCP, and manual time synchronization.
	Security Settings	-	Configure security parameters, such as the account password.

Level-1 Menu	Level-2 Menu	Level-3 Menu	Description
System Maintenance	-	-	• Restart Data Logger • Restore Factory Settings • Import Full Configuration File • Export Full Configuration File • Remote Access Permission
Apply Configuration	-	-	Save the setting parameters. After modifying the networking or parameters, click Apply Configuration to confirm the settings.

7.1.3 Log in to WEB Interface

NOTICE

- Ensure that all devices in the PV system are correctly installed, powered on, and running.
- LoginWEBBefore accessing the interface, ensure that the device meets the following requirements:
  - SupportsWindows 7and later operating systems.
  - Browser: Recommended to useChrome68、 Firefox78and later versions.
  - The computer's network port has been connected to a switch port on the device using an Ethernet cable.
- After completing the interface configuration, please unplug the Ethernet cable from theETHport.

Log in to the Web interface using the default IP.

Step1: Connect the computer to any network port of the switch in the control box using an Ethernet cable.

Step2: In the computer system, select "Network andInternet”>"Change adapter options". In the pop-up Network Connections dialog box, right-click and select "Properties", and configure theIPaddress of the computer and the device in the same

subnet.

No.	IP Parameters	Factory Default Value	Sample computer settings
1	IP address	172.18.0.12	172.18.0.22
2	Subnet mask	255.255.255.0	255.255.255.0
3	Default gateway	172.18.0.1	172.18.0.1

Step3: Enter https://172.18.0.12:443in the browser address bar to access the login page.
Step4: Select the language as required. Use the initial account name and password to log in to theWEBinterface. Initial account name:admin; initial password:123456。

Log in to the WEB interface using a dynamic IP address

Step1: Connect the control box and the computer to the router simultaneously using network cables.
Step2: On the router management page, check theIP。
Step3: Enter the allocatedIPin the browser address bar to access the login page.
Step4: Select the language as required. Use the initial account name and password to log in to theWEBinterface. Initial account name:admin; initial password:123456。

Log in to the WEB interface using WiFi

Step1: Connect the computer to the data collector's defaultWiFiname:Log-***， ***is the device serial number.WiFidefault password:12345678。
Step2: Enter https://172.18.0.12:443in the browser address bar to access the login page.
Step3: Select the language as required. Use the initial account name and password to log in to theWEBinterface. Initial account name:admin; initial password:123456。

NOTICE
For the first login, use the initial password and change it as soon as possible. Keep the password in mind. To ensure account security, it is recommended to change the password regularly.

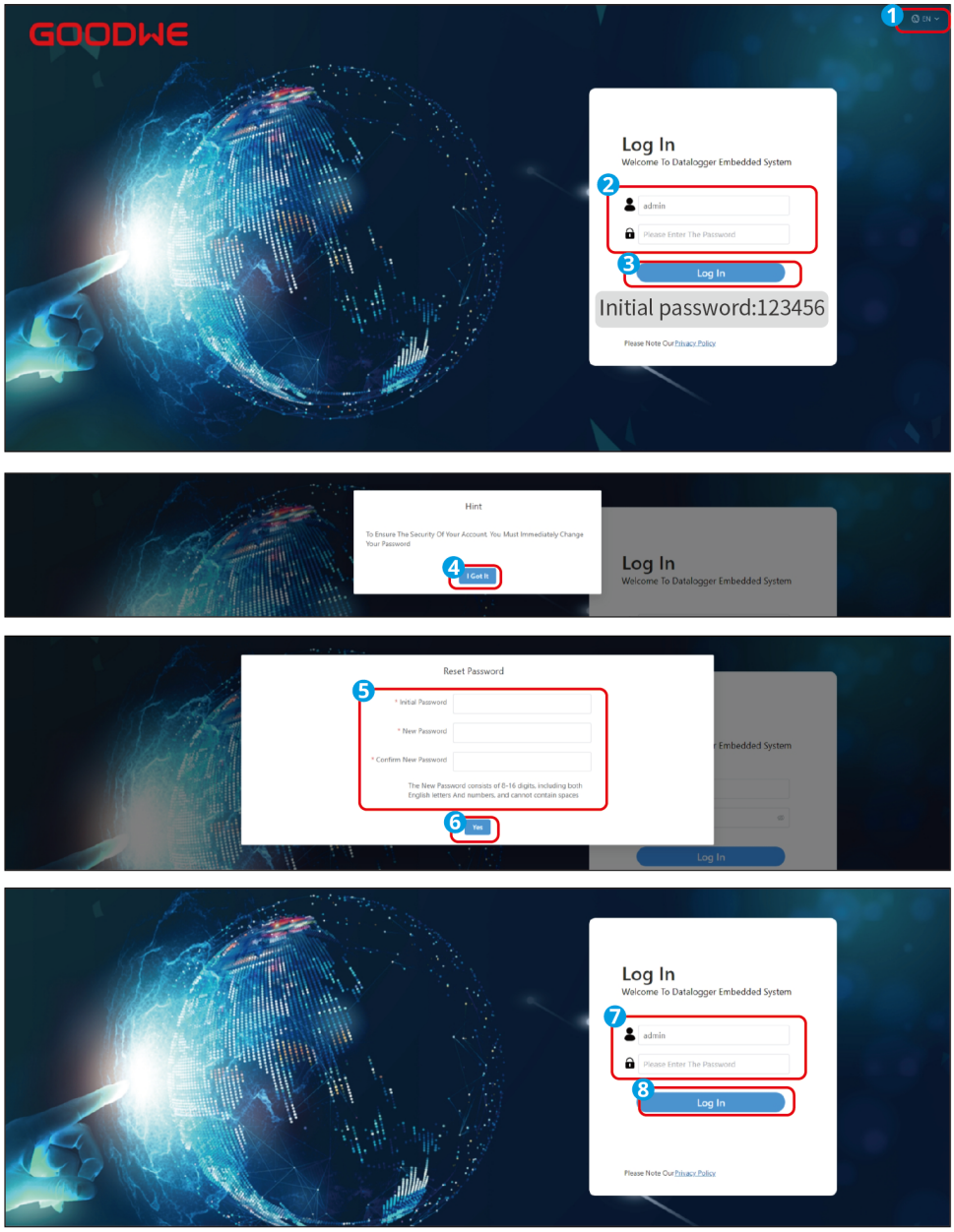

EZU30CON0014

7.2 Configure Startup Wizard

- On first login, the interface prompts you to use the startup wizard for Quick Configuration of the system. Configure according to the interface prompts and actual requirements. It supports device networking, setting device parameters, and more.
- If you do not need to configure the system temporarily, click End Wizard; if you do not need to configure a certain function temporarily, click Skip.

- For detailed information about configuration functions, refer to the function descriptions in the corresponding chapters of the manual.

Step 1: On first login, you can enter the startup wizard screen after logging in. If you have exited the wizard screen, click "Startup Wizard" to enter it again.
Step 2: During parameter setting, click Previous or Next as needed to perform the corresponding settings.

- Set the system time according to actual conditions.

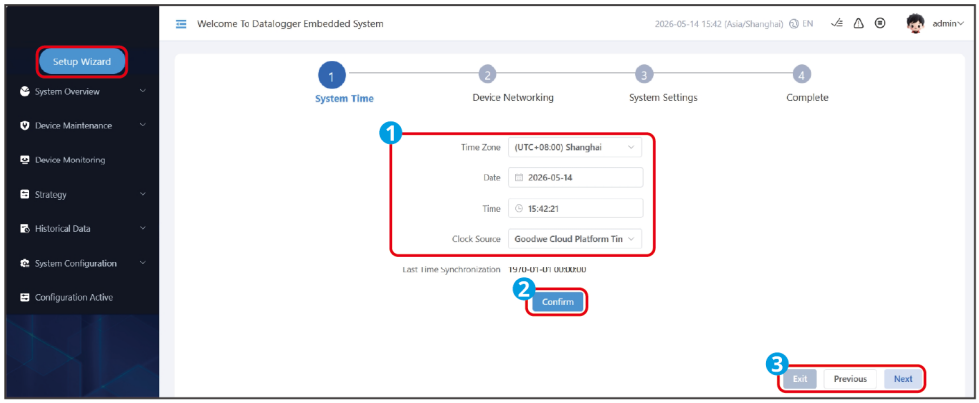

SEC30CCON0027

- Click "Search Device" to automatically search for devices in the system and complete networking.

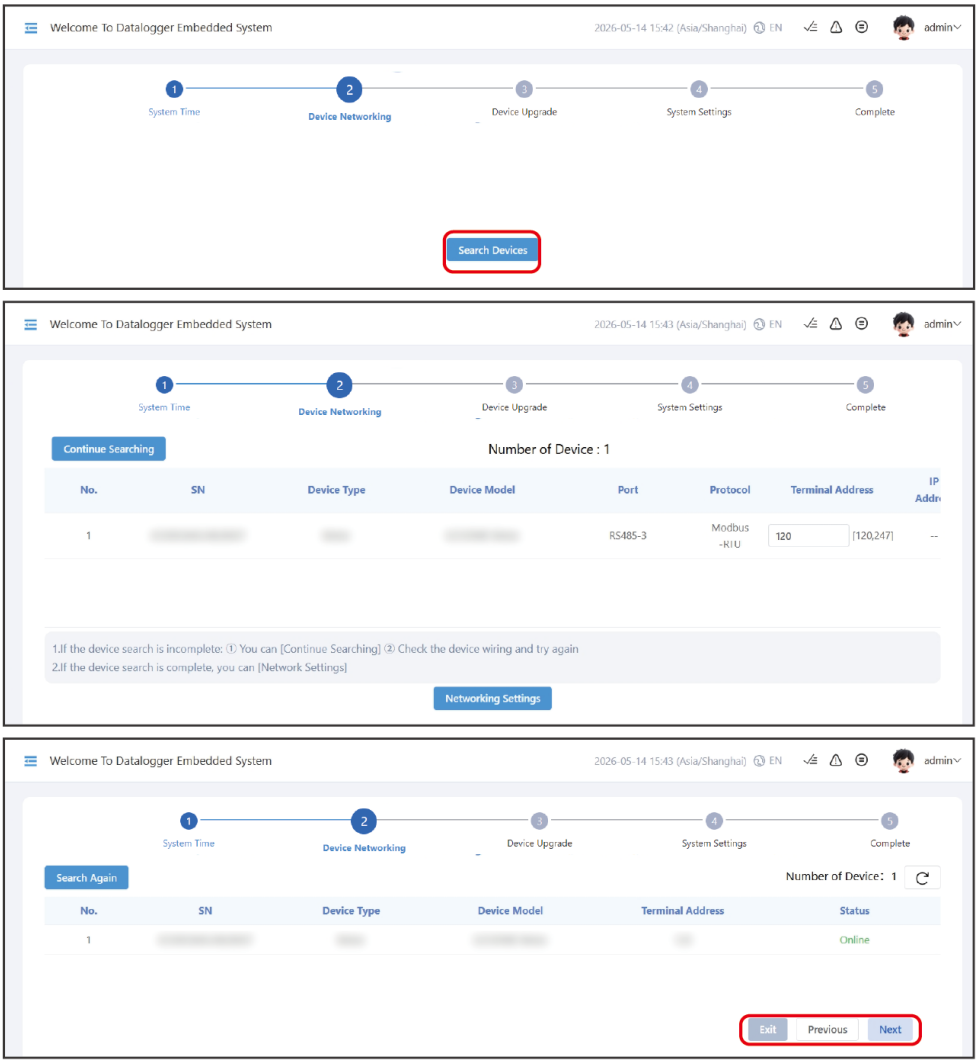

SEC30CCON0085

- Device Upgrade
  When devices that require version upgrade are detected, complete the device upgrade according to the interface prompts. The upgrade here only applies to some version upgrades. To upgrade all devices, go to the Device Upgrade screen to perform the operation.

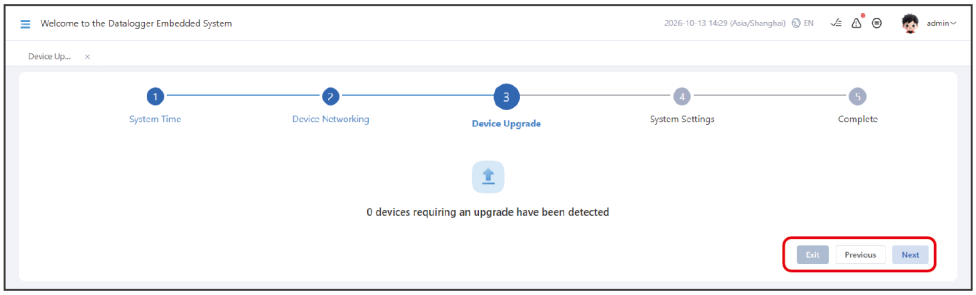

SEC30CCON0141

- System Settings
  - Device parameters: Set device operating parameters according to actual conditions, such as safety region, meter CT value, etc.

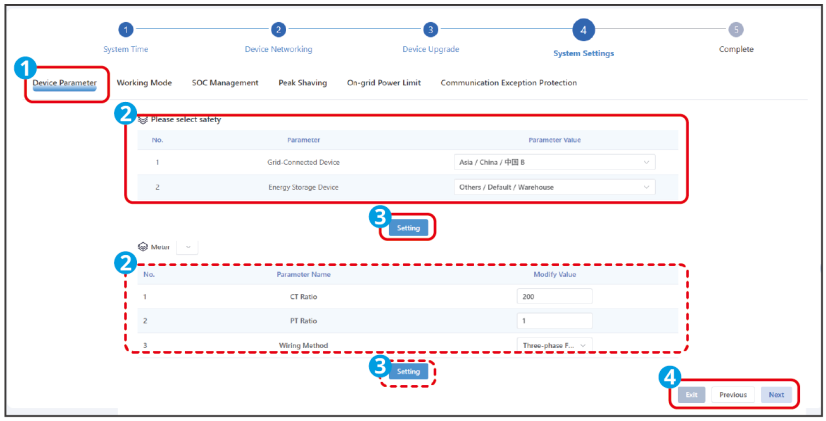

SEC30CCON0084

  - Operating Mode: Set the system operating mode according to actual conditions. For more information, refer to7.6.1.1.Setting Operating Mode Parameters(Page 133)chapter.

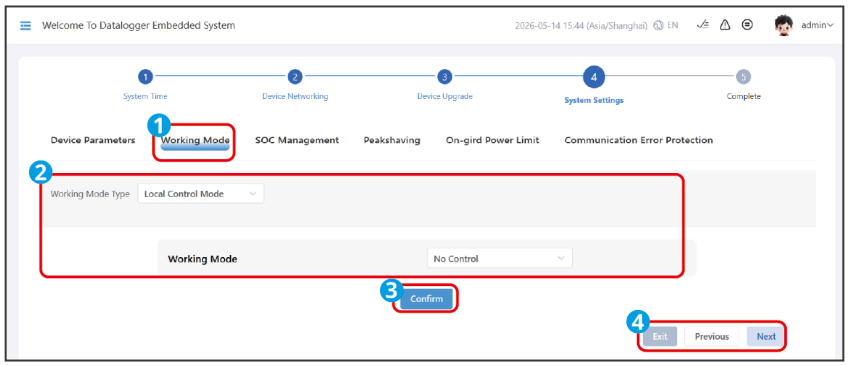

SEC30CCON0087

  - SOC management: Set the upper and lower SOC limits of the energy storage system. For more information, refer to7.6.1.2.Setting SOC Management(Page 136)chapter.

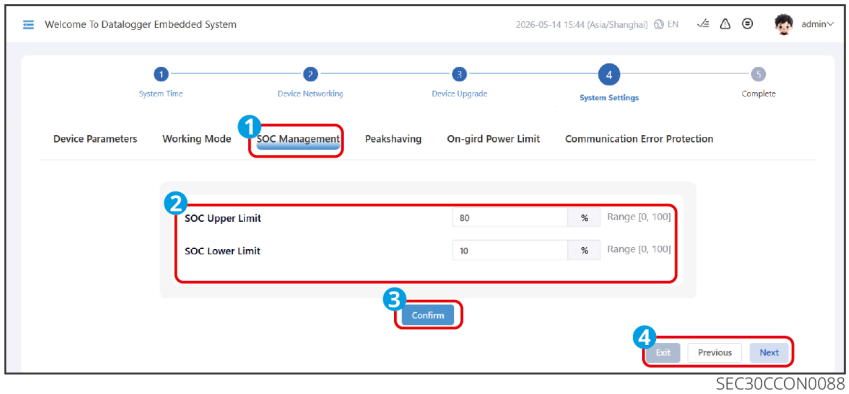

SEC30CCON0088

- Demand management: Mainly applicable to scenarios with restricted peak power purchase. By controlling battery discharge to supply power, it ensures that the power purchased from the grid side does not exceed the limit. For more information, refer to7.6.1.4.Setting the Demand Management Function(Page 138)chapter.

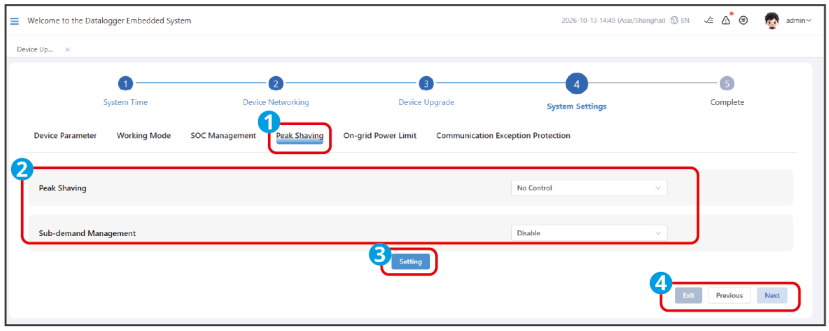

SEC30CCON0089

- Grid-connected power limit: By setting the grid-connected power limit parameters, you can control the Energy Generation fed into the grid to prevent it from exceeding the limit. For more information, refer to7.6.1.3.Set Power Limit Parameters(Page 137)chapter.

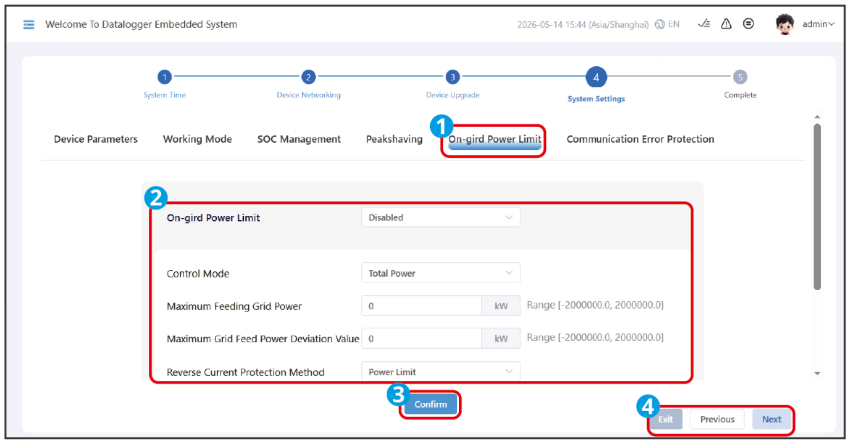

SEC30CCON0090

- Communication exception configuration: When device communication is abnormal, the device operates at limited power or disconnects from the grid according to the settings. For more information, refer to7.6.1.6.Set Communication Exception Configuration(Page 140)chapter.

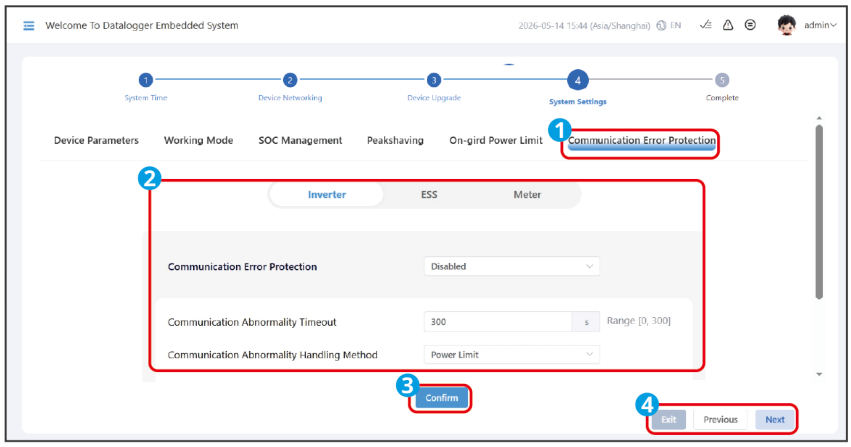

SEC30CCON0091

Step 3: After the startup settings are complete, you can view the number of devices in the current network, their online status, and alarms. Click Finish to exit the startup wizard.

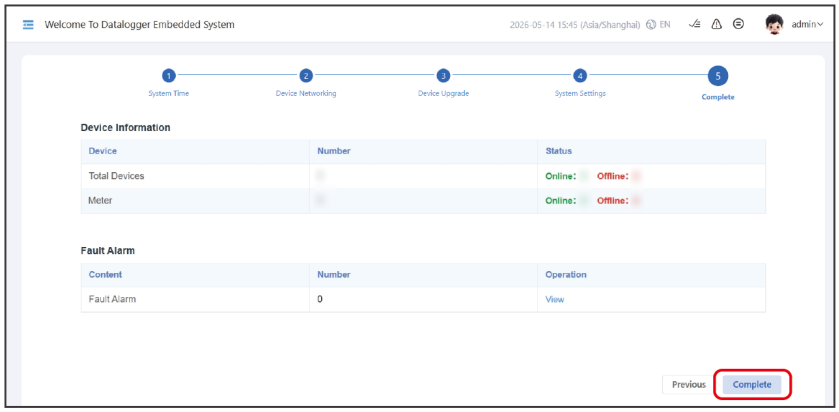

SEC30CCON0086

7.3 System Scenario Parameter Settings

7.3.1 Microgrid Scenario Parameter Settings (ET100)

NOTICE

- When the energy storage inverter of the integrated energy storage cabinet is paired with STS, grid-tied inverter, and SEC3000C, it supports On/Off-grid switching and enables microgrid functionality.
- Before using microgrid mode, confirm that all devices in the system are correctly wired and operating normally.

Procedure

1. Refer to7.5.1.4.Set General Data for Energy Storage Inverter(Page 99)chapter to set "Wiring Mode" to "Data Logger Parallel Backup Parallel".
2. If diesel generator equipment is installed in the system, refer to7.5.1.6.Set Generator Parameters(Page 104)chapter to set "Port Type" to "Diesel Generator Connection" and "Diesel Generation Control Mode" to "Parallel Microgrid".
3. Refer to7.6.2.Set Micro-Grid Control Parameters(Page 141)chapter to set microgrid parameters according to actual requirements.

7.3.2 Microgrid Scenario Parameter Settings (ESA261)

NOTICE

- When the integrated energy storage cabinet is paired with STS, grid-tied inverter, and SEC3000C, it supports On/Off-grid switching and enables microgrid functionality.
- Before using microgrid mode, confirm that all devices in the system are correctly wired and operating normally.

Procedure

1. Refer to7.5.4.2.Set General Data for Energy Storage Integrated Cabinet(Page 126)chapter to set the integrated cabinet's "Wiring Mode" to "STS-Backup Parallel".
2. Refer to7.5.4.2.Set General Data for Energy Storage Integrated Cabinet(Page 126)chapter to set the integrated cabinet's "Parallel Quantity" to the actual number of parallel units.
3. Refer to7.5.4.2.Set General Data for Energy Storage Integrated Cabinet(Page 126)chapter to enable the integrated cabinet's "Backup Power" function.

4. Refer to7.5.4.3.Set Advanced Parameters for Energy Storage Integrated Cabinet(Page 128)chapter to enable the integrated cabinet's "VSG Mode".
5. Refer to7.5.5.Set STS Parameters(Page 130)chapter to set STS parameters according to actual connection conditions.
6. Refer to7.6.2.Set Micro-Grid Control Parameters(Page 141)chapter to set microgrid parameters according to actual requirements.

7.4 Device Management

7.4.1 Automatically Search and Add Devices

NOTICE

- After the network is created successfully, if you need to add devices that were not found in the search, you can add devices via "Device Access".
- If a third-party meter is used in the system, it must be added manually and cannot be automatically searched for and added.

Operating steps:

1. Go to "Device Maintenance">"Network Settings">"Ethernet Networking" to enter the device networking interface. Click "Search Devices" to start searching for online energy storage inverters or integrated energy storage cabinets.

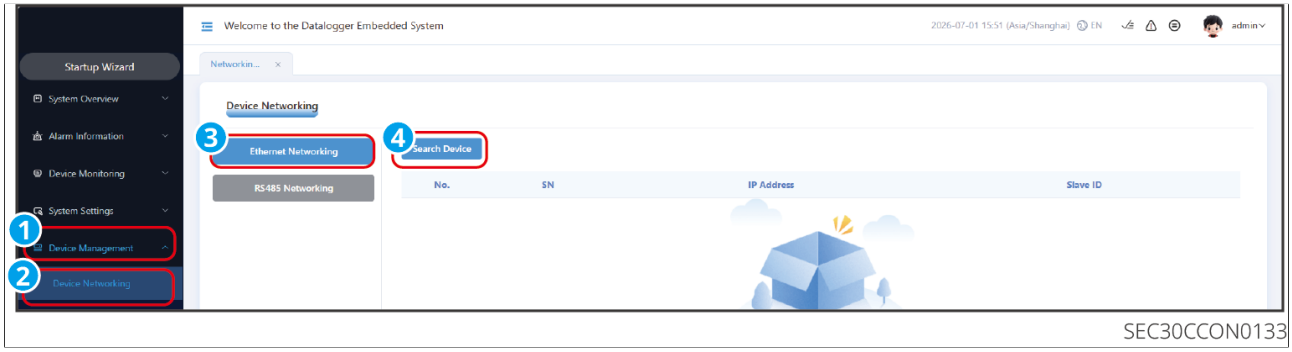

SEC30CCON0133

2. Check the number of devices currently found. When the number of devices matches the actual number, click "Stop Search".

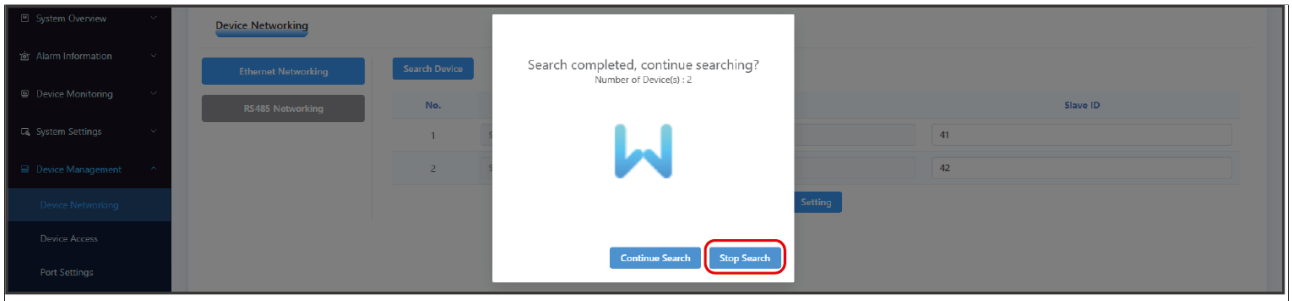

SEC30CCON0134

3. After the device search is complete, return to the device networking interface and set the device terminal address according to actual requirements. Terminal address range: 1-99. If there are multiple inverters, ensure that terminal addresses are not duplicated. Click "Set" to complete Ethernet networking.

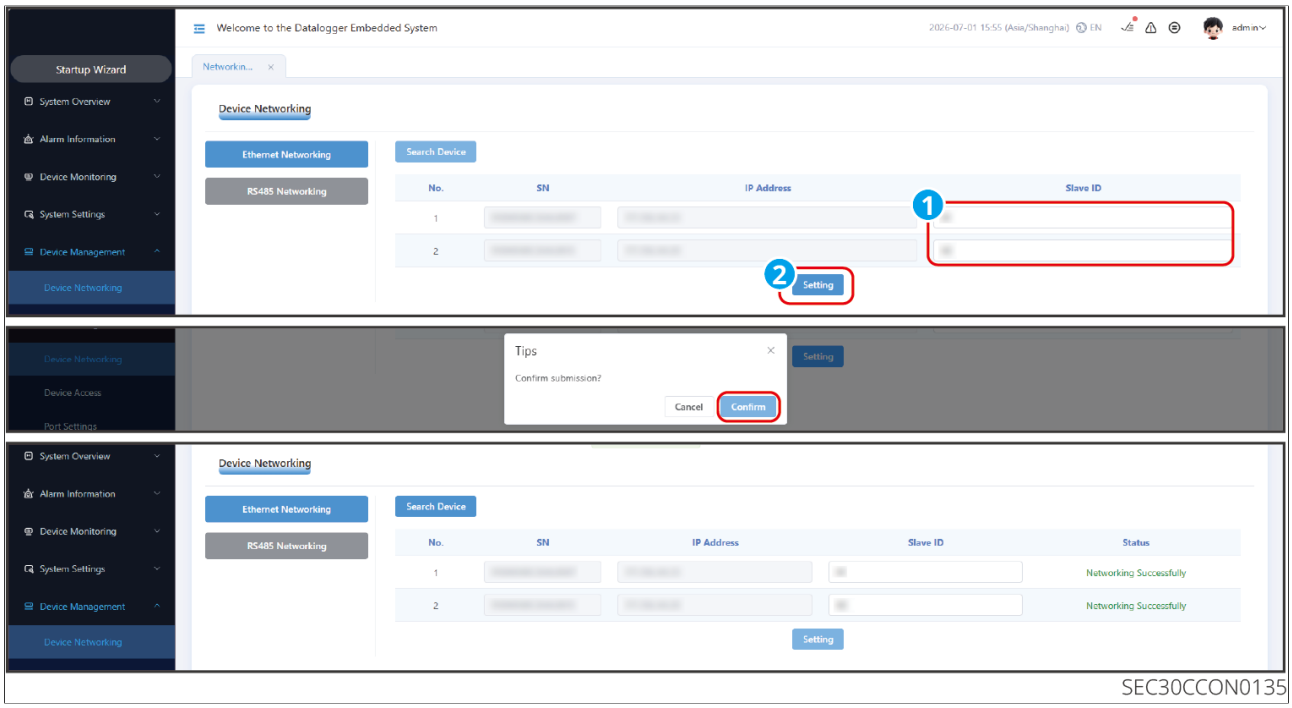

SEC30CCON0135

4. Go to "Device Maintenance">"Network Settings">“RS485Networking" to enter the device networking interface. Click "Search Devices" to start searching for online grid-connected inverters and meters.

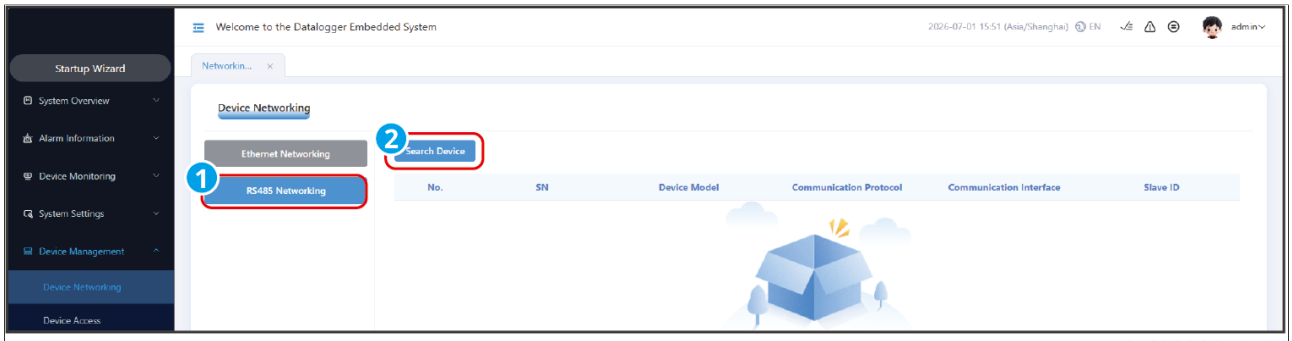

SEC30CCON0136

5. Check the number of devices currently found. When the sum of the inverter count and meter count matches the actual number, click "Stop Search".

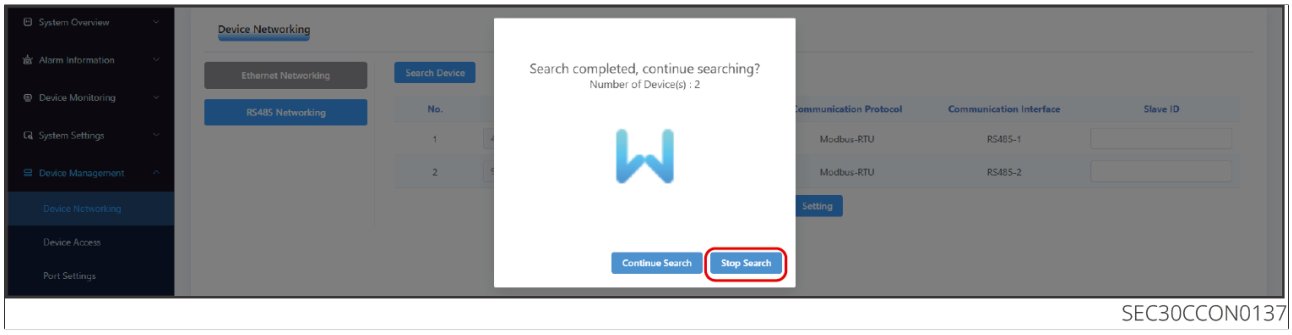

SEC30CCON0137

6. After device search is complete, return to the device networking screen and set the terminal addresses of the inverters and meters according to actual requirements. Inverter address range: 1-99; meter address range: 120-200. If there are multiple inverters, ensure that terminal addresses are not duplicated. Click "Set" to complete RS485 networking.

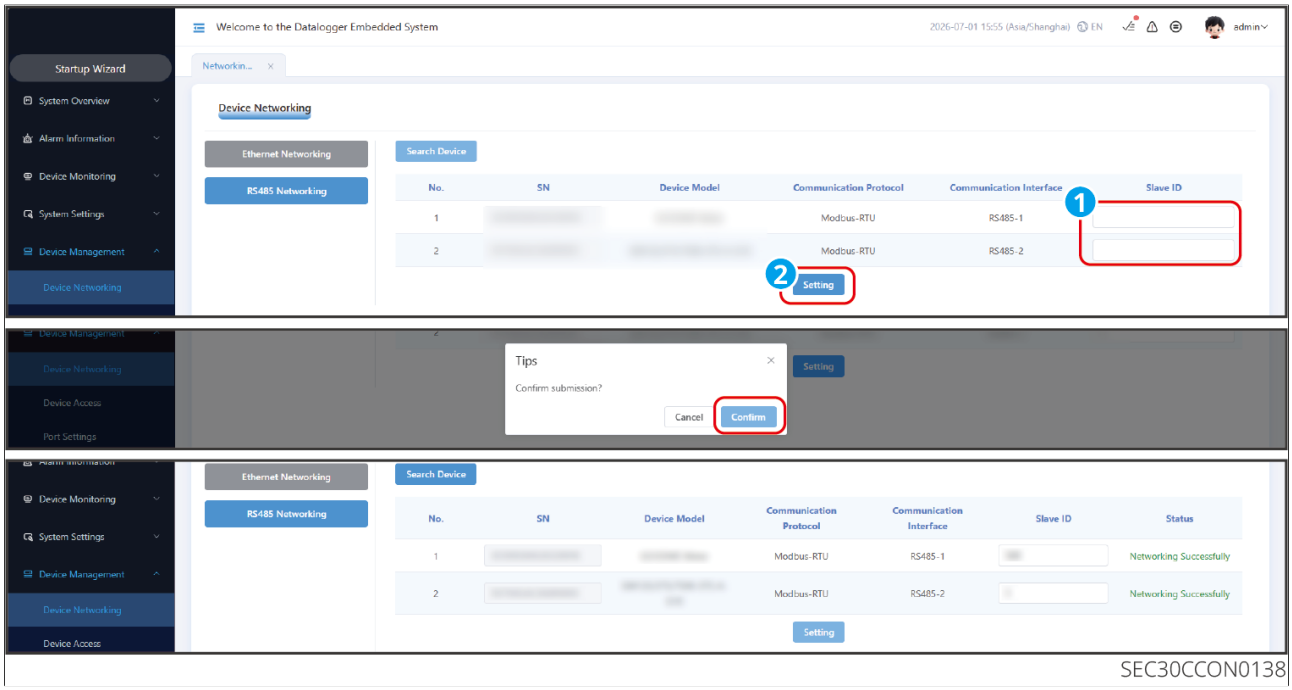

SEC30CCON0138

7. Complete the networking configuration through "Apply Configuration".

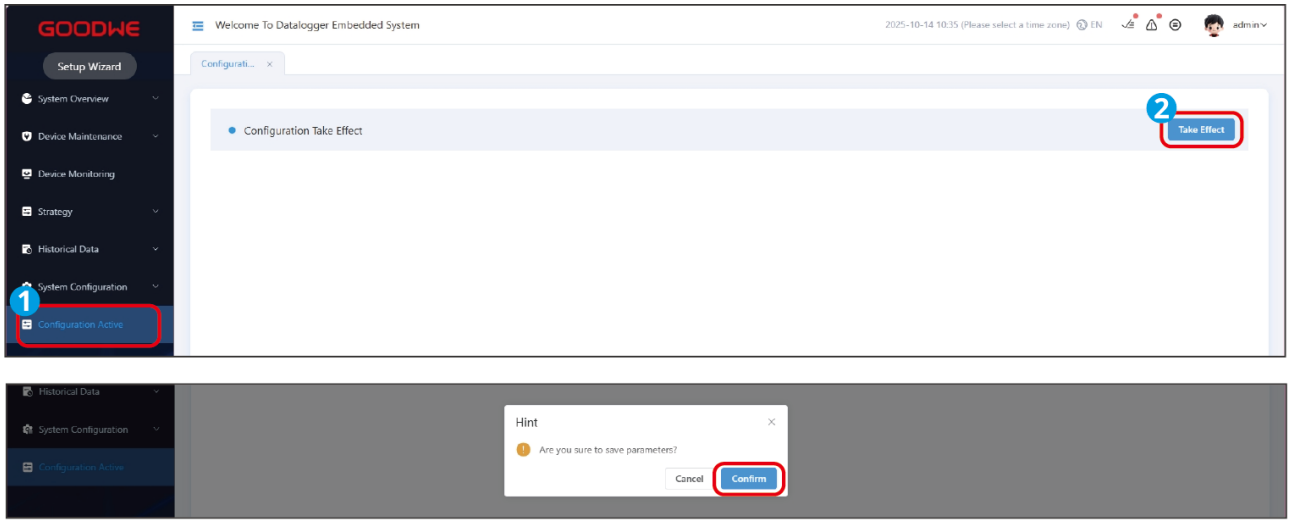

SEC30CCON0034

7.4.2 Manually Add Devices

NOTICE

- After the network is created successfully, if you need to add devices that were not found in the search, you can add devices via "Device Access".
- Click Edit or Delete to modify or delete the parameters of added devices.

Steps for adding a grid-tied inverter/environmental monitor:

1. Go to "Device Management">"Device Access">"Grid-Tied Inverter/Environmental Sensor">"Add Device" to enter the Add Device screen.
2. Set the device parameters according to actual requirements. Click "Confirm" to complete device addition.

Supported environmental sensor models: IMT Technology Digital Module Temperature Sensors Tm-RS485-MB / Tm-RS485-MB-A; HukseﬂuxSRO5-D1A3 &SR05-D2

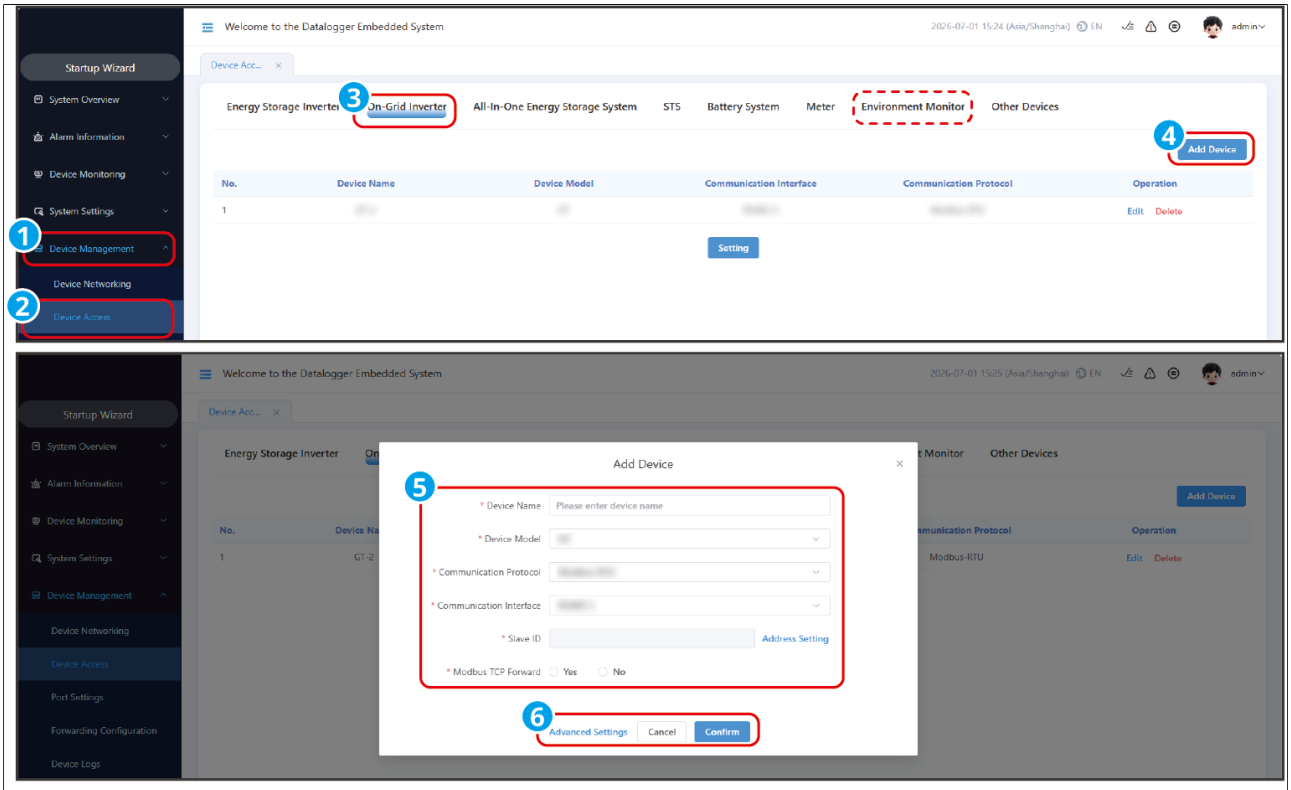

SEC30CCON0124

No.	Parameter Name	Description
1	Device Name	Custom device names are supported; name the device according to the actual situation.
2	Device Model	Select the model of the inverter actually connected.
3	Communication Protocol	Set according to the inverter communication protocol. Currently supported: Modbus-RTU.
4	Communication Interface	Set according to the port on the control box to which the inverter is actually connected.
5	Terminal Address	• Set the inverter terminal address according to the actual plant plan. If setting according to actual conditions is not required, you can select Auto Generate. • Ensure that different devices have different addresses.

Add Energy Storage Inverter/all-in-one energy storage cabinet/STS/battery system/third-party device/data logger:

1. Go to "Device Management">"Device Access">"Energy Storage Inverter"/"All-in-one Energy Storage Cabinet/STS/Battery System/Third-party Device/Data Logger”>"Add Device" to enter the Add Device screen.
2. Set the device parameters according to actual requirements. Click "Confirm" to complete device addition.

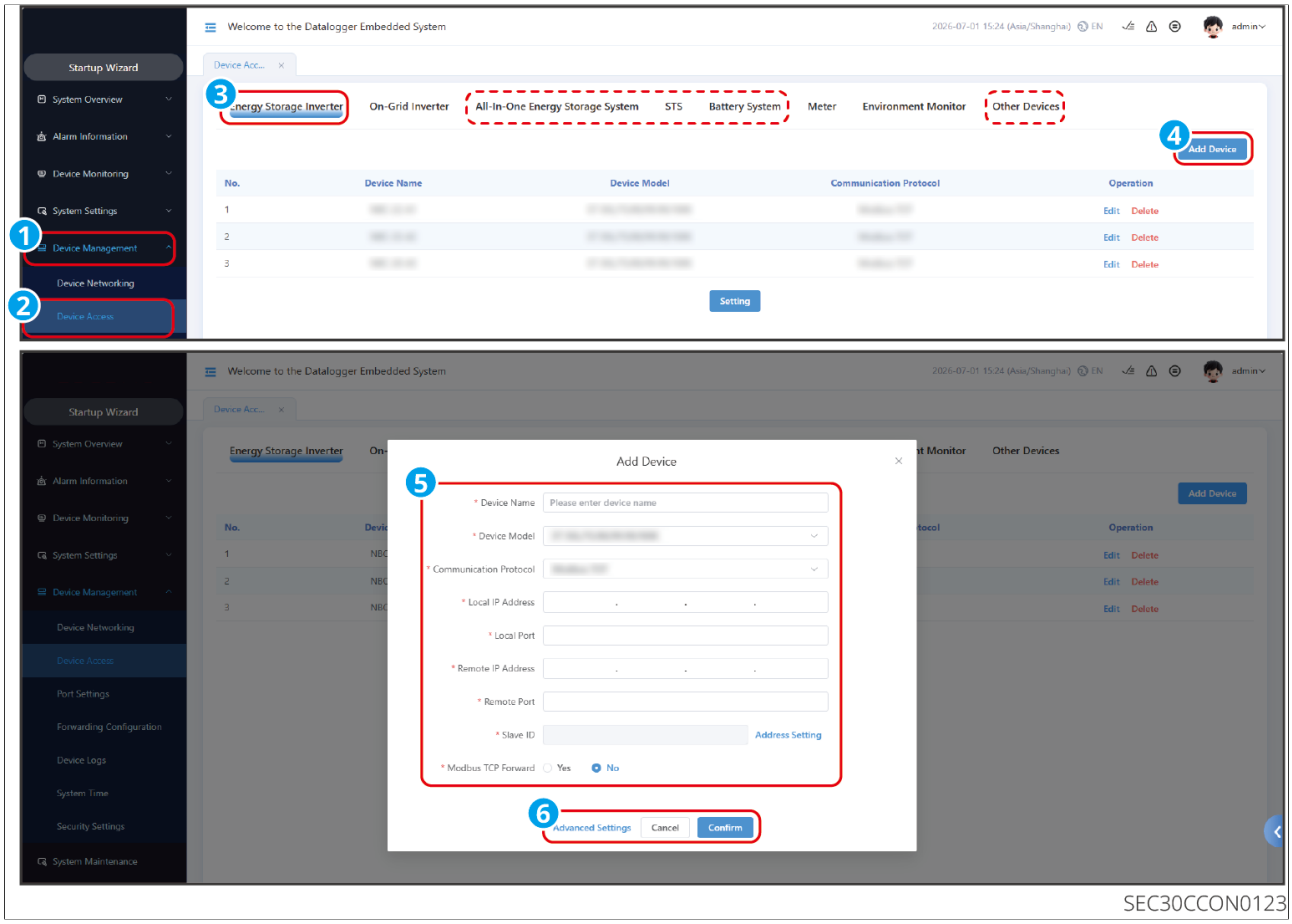

SEC30CCON0123

No.	Parameter Name	Description
1	Device Name	Custom device names are supported; name the device according to the actual situation.
2	Device Model	Select the model of the device actually connected.
3	Communication Protocol	Set according to the inverter communication protocol. Currently supported:Modbus-TCP。
4	LocalIPAddress	Set to theIPaddress corresponding to the network port connected to other devices.
5	Local Port	Set to the port number of the control box; the default value is0。

No.	Parameter Name	Description
6	PeerIPAddress	Set to theWiFi/LAN Kit-20communication stick connected to the energy storage inverter, the all-in-one energy storage cabinet, STS, or the communication stick connected to BAT100'sIPaddress corresponding to the network port connected to other devices.
7	Peer port	Set to the port number of the other device to be added; the default value is502。
8	Terminal Address	Set the inverter terminal address according to the actual plant plan. If setting according to actual conditions is not required, you can select Auto Generate.

Steps for adding a meter:

1. Go to "Device Management">"Device Access">"Meter">"Add Device" to enter the Add Device screen.
2. Set the device parameters according to actual requirements. Click "Confirm" to complete device addition.

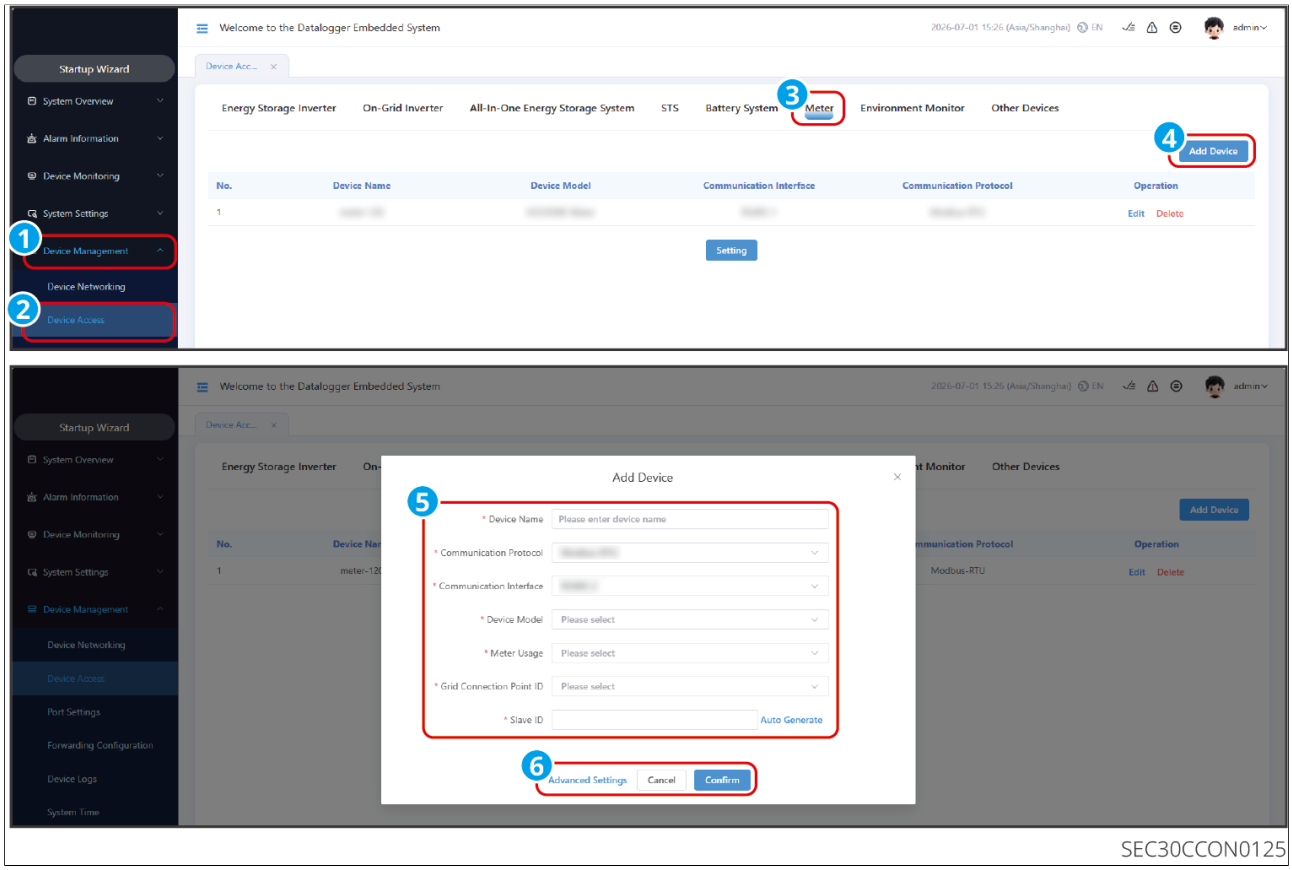

SEC30CCON0125

No.	Parameter Name	Description
1	Device Name	Custom device names are supported; name the device according to the actual situation.
2	Communication Protocol	Set according to the meter's communication protocol. Currently supported:Modbus-RTU。
3	Communication Interface	Set according to the port on the control box to which the meter is actually connected. Supported:RS485-1、RS485-2、RS485-3、RS485-4。
4	Device Model	Select the meter model actually used. Supported:GoodWe meter,UGM604PRO, Acrel-DTSD1352-CT/C, Schneider Electric-IEM3255、Janitza UMG604PRO、ITR manual、Mikro DPM680, etc.

No.	Parameter Name	Description
5	Meter usage	Select according to the actual usage of the meter. • Grid-side meter: The meterCTis clamped at the grid connection point to monitor grid connection point data and is used for Power Limit. • Generation-side PV-storage meter: The meterCTis clamped at the upstream side of the grid-tied inverter and energy storage inverter to monitor the power consumption information of both. • Generation-side PV meter: The meterCTis clamped on the grid-tied inverter side to monitor the power generation data of the grid-tied inverter. • Generation-side energy storage meter: The meterCTis clamped on the energy storage inverter side to monitor the power generation data of the energy storage inverter. • Third-party PV meter: Used to monitor the power generation data of third-party inverters when third-party grid-tied inverters are used in the system.
6	Grid connection point number	Select according to the transformer number connected to the inverter.
7	Terminal Address	• Set the meter terminal address according to the actual plant planning. If no setting based on actual conditions is required, you can select Auto Generate. • Do not set the meter address and the inverter address to the same address.
8	Access point table	Import the access point table according to actual conditions.

7.4.3 Set Port Parameters

7.4.3.1 Set LAN Communication Parameters

NOTICE

- Before configuring LAN parameters, ensure that the Ethernet cable is correctly connected to the control box.
- After the system networking configuration is complete, the ETH1 and ETH2 ports automatically complete LAN configuration, with no additional configuration required. At this time, the ETH1 port defaults to DHCP mode and the ETH2 port defaults to STATIC mode.
- By default, the switch is connected to the data loggerETH2port. Setting theETH2port parameters sets the switch Ethernet port networking parameters.

Operating steps:

1. Go to "Device Management">"Port Settings">“LANConfiguration" to enter the parameter setting screen.
2. Set theETHport parameters according to actual requirements.

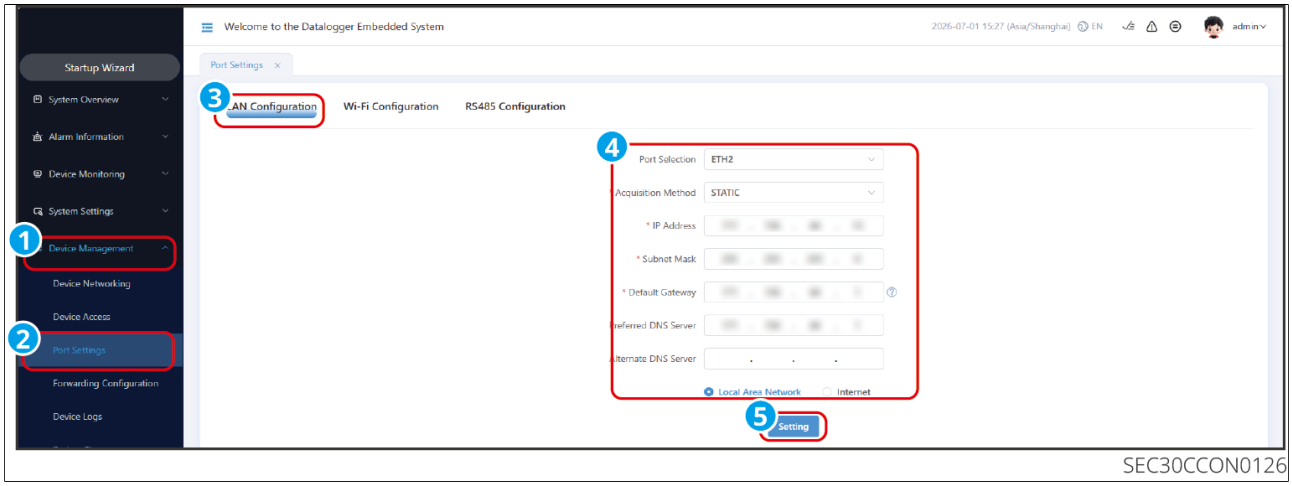

SEC30CCON0126

No.	Parameter Name	Description
1	Port selection	Set the network port actually connected to the data logger. Supported: ETH1, ETH2.

No.	Parameter Name	Description
2	Procurement method	• When STATIC mode is selected, the relevant network parameters are fixed and must be manually set according to actual conditions. • When DHCP mode is selected, an IP address can be automatically obtained and registration completed.
3	IPAddress	Set the IP address of the control box. According to the plant plan, it can be set to an IP address in the same subnet as the router. If the IP address is changed, you need to log in again using the new IP address.
4	Subnet mask	Set the subnet mask of the control box. Set it according to the actual mask of the router to which the device is connected.
5	Default gateway	Set the default gateway of the control box. Set it according to the actual gateway of the router to which the device is connected.
6	PrimaryDNSserver	Configure this when connecting to a public network (for example, connecting to GoodWe Cloud, where a domain name is used for the server address); set it to the LAN router IP address.
7	BackupDNSserver	Under normal circumstances, this parameter setting can be ignored. When the primary DNS server cannot resolve a domain name, the backup DNS server is used.

No.	Parameter Name	Description
8	LAN/Internet	• If you need to connect to a server to transmit data to GoodWe Cloud, select Internet. • If you need to set forwarding parameters to connect to a third-party monitoring platform, etc., select LAN.

7.4.3.2 Set the Wifi Password

NOTICE

- The data logger built into the control box provides a WiFi hotspot signal for local configuration. After the computer connects to the WiFi hotspot signal, you can access web commissioning through the web page.
- The WiFi signal password can be modified. After modification, log in to the web again using the new password.

Operating steps:

1. Go to "Device Management" > "Port Settings" > "Wi-Fi Configuration" to enter the parameter setting screen.
2. Set the Wi-Fi hotspot signal password according to actual requirements.

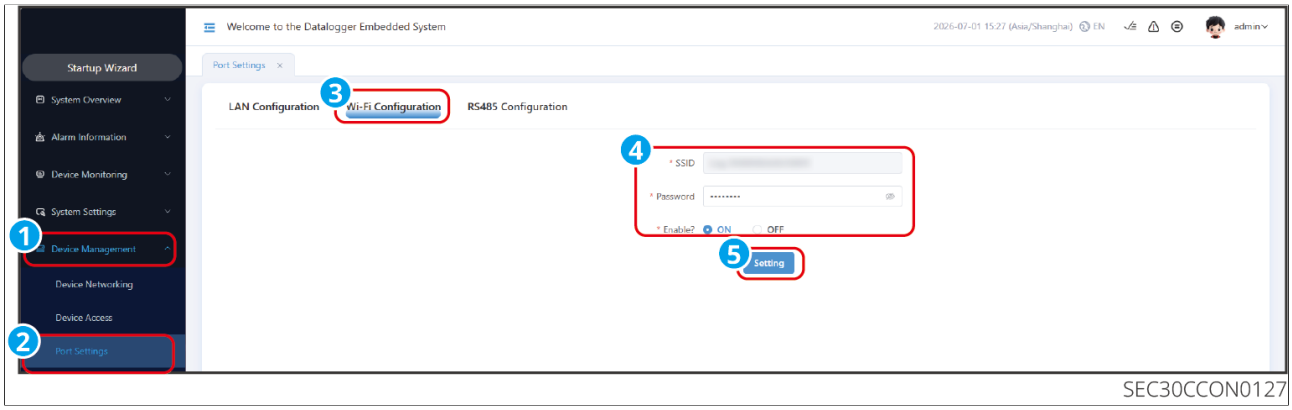

SEC30CCON0127

7.4.3.3 Set RS485 Communication Parameters

NOTICE
When the control box is connected to third-party devices, the RS485 parameters must be set.

Operating steps:

1. Go to "Device Management">"Port Settings">“RS485Configuration" to enter the parameter setting screen.
2. Configure the communication parameters according to actual requirements.

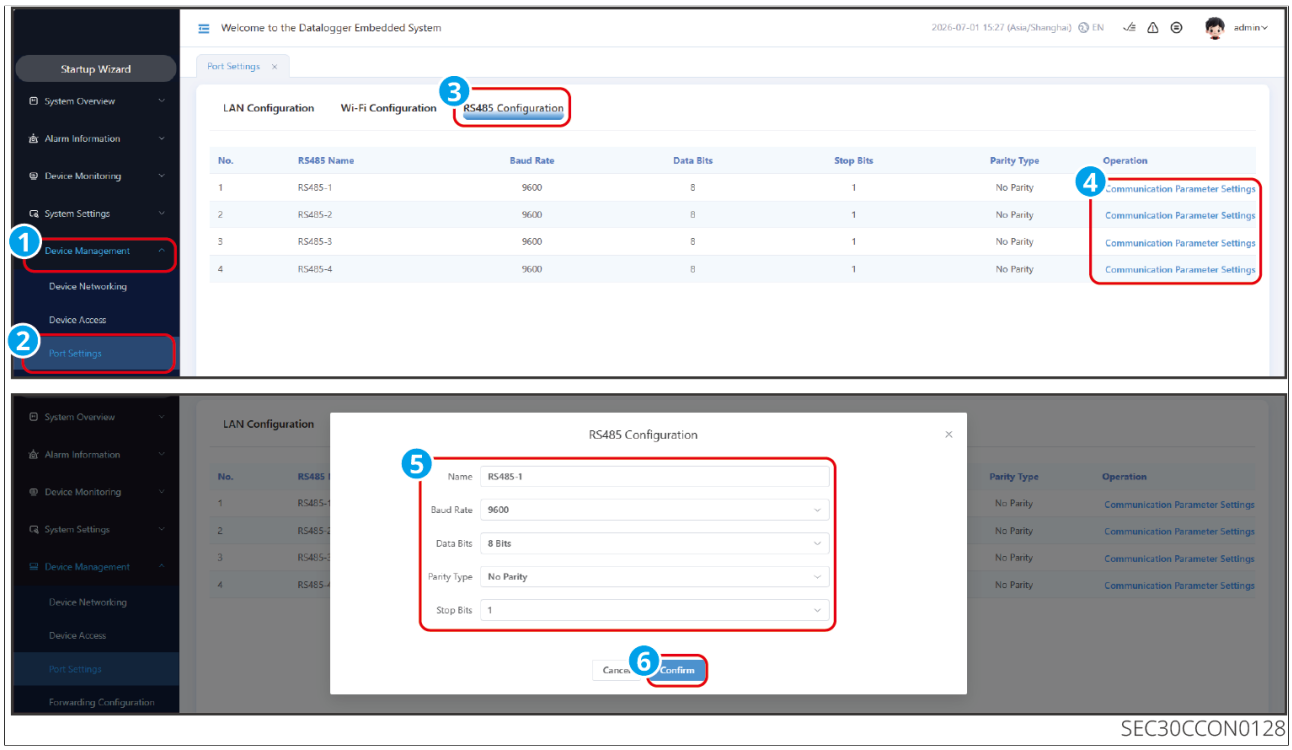

SEC30CCON0128

No.	Parameter Name	Description
1	Name	Select based on the RS485 port to which the device is actually connected.
2	Baud rate	Set according to the baud rate of the connected device. Currently supported: 300, 1200, 2400, 4800, 9600, 19200, and 115200.
3	Data bits	Currently supported: 7 bits and 8 bits.

No.	Parameter Name	Description
4	Parity	Set according to the parity mode of the connected device. Currently supported: None, Odd, Even, 0 parity, and 1 parity.
5	Stop bits	Set according to the stop bits of the connected device. Currently supported: 1, 1.5, and 2.

7.4.4 Set Modbus-TCP Parameters

Configure forwarding parameters to forward the data collected by the control box to a third-party monitoring platform through the Modbus-TCP protocol.

Procedure

1. Go to the parameter setting screen via "Device Management" > "Forwarding Settings" > Modbus-TCP.
2. Add a Modbus-TCP channel according to actual requirements and set the communication parameters.

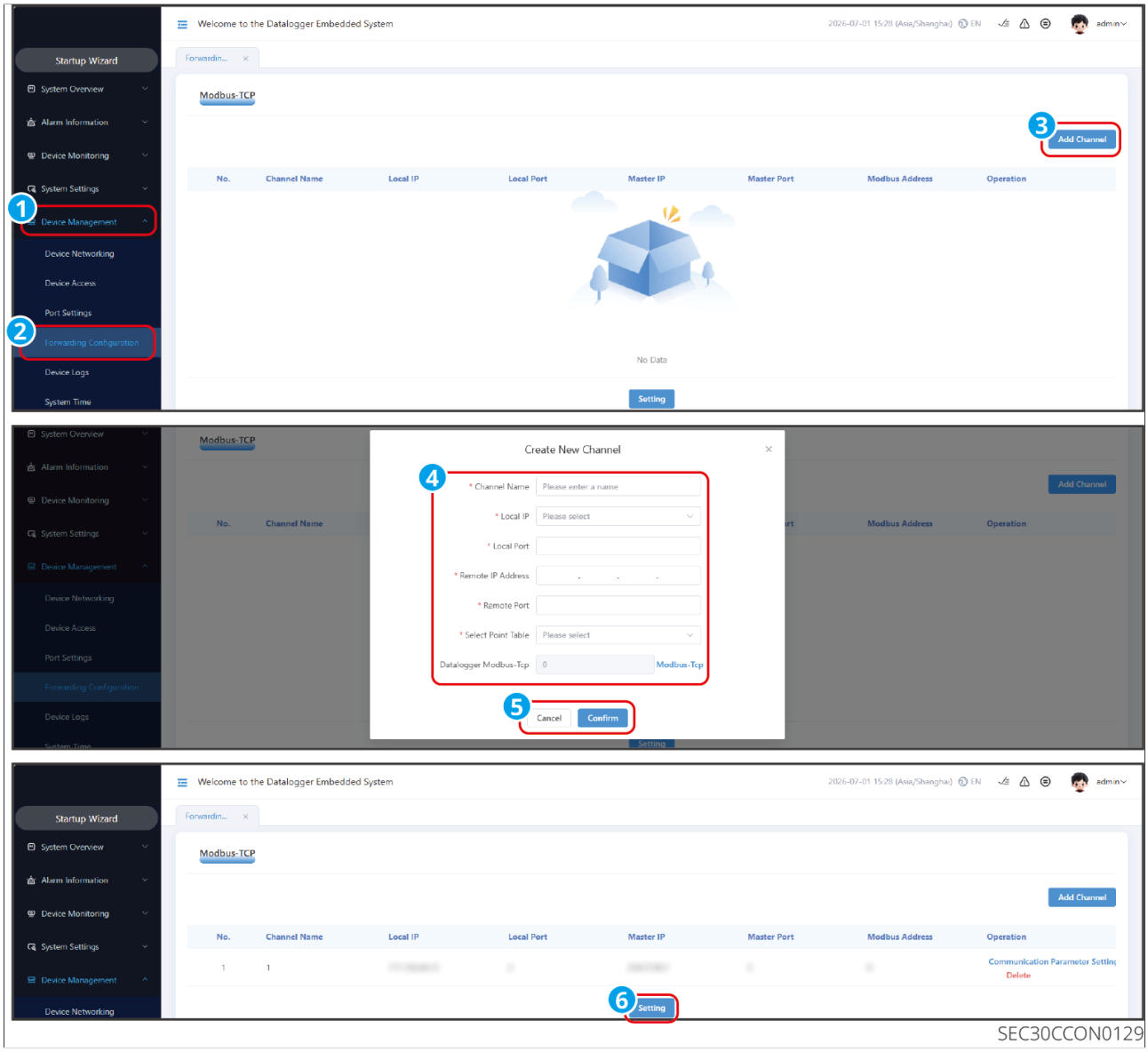

SEC30CCON0129

No.	Parameter Name	Description
1	Channel name	Custom device names are supported. Set the device name according to actual conditions.
2	Local IP	Set to the IP address of the control box.
3	Local port	Set to the port number of the control box. The default value is 502.
4	Master IP	Set to the IP address of the Modbus-TCP management system.

No.	Parameter Name	Description
5	Master station port	Set to the port number of the Modbus-TCP management system.
6	Point table selection	Import the point table according to actual conditions.
7	Data acquisition TCP address	Set the address of the Modbus-TCP management system. To modify the address, click "Modbus-Tcp".

7.5 Set Device Parameters

7.5.1 Set Energy Storage Inverter Parameters

7.5.1.1 Set Safety Code

Operating steps:

1. Go to "Device Monitoring" > "Parameter Settings" > "Energy Storage Inverter" to enter the parameter setting screen.
2. Select the device type and select the SN of the inverter to view or set.
3. Click "Select Safety Code" > "Modify", and select the corresponding safety code according to the country or region where the device is located. Click "Set" to complete the configuration.

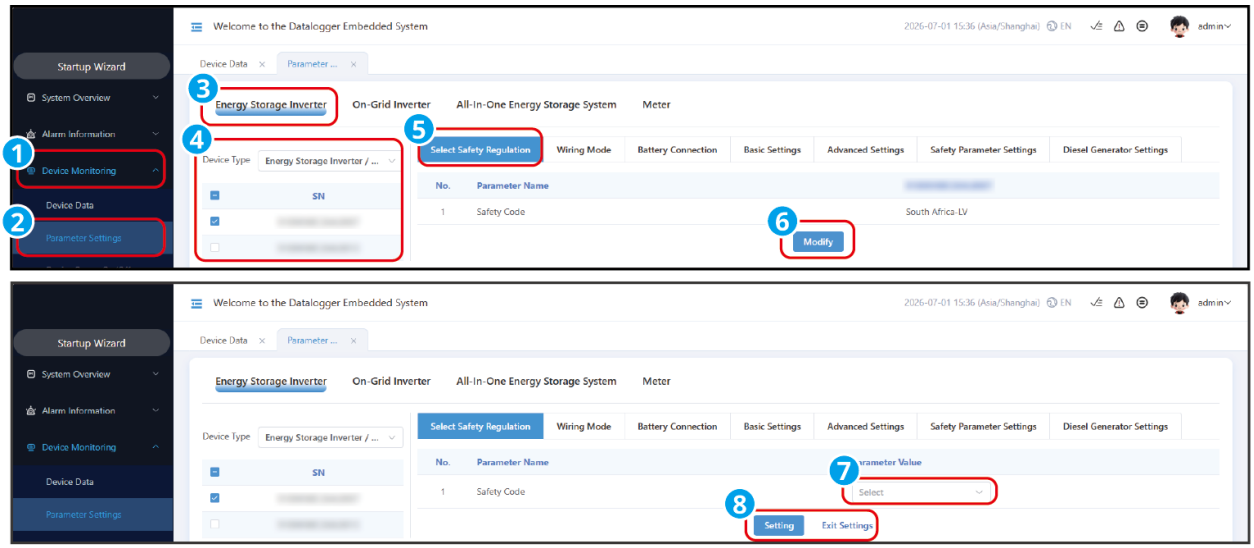

SEC30CCON0092

7.5.1.2 Set Wiring Mode

Operating steps:

1. Go to "Device Monitoring" > "Parameter Settings" > "Energy Storage Inverter" to enter the parameter setting screen.
2. Select the device type and select the SN of the inverter to view or set.
3. Click "Wiring Mode" > "Modify", select the wiring mode according to actual requirements, and click "Set" to complete the configuration.

- Grid-connected: Select this mode for grid-connected systems.
- Data Logger Parallel + STS + Microgrid: Applicable to On/Off-grid scenarios using STS; select this mode for On/Off-grid switching scenarios with a utility grid and a diesel generator.
- Data Logger Parallel + No STS + Microgrid: Applicable to pure off-grid scenarios without STS; select this mode for pure off-grid scenarios without a utility grid and without a diesel generator.
- Distributed STS Parallel: Applicable to distributed STS parallel scenarios where each energy storage inverter is equipped with a 125K STS.

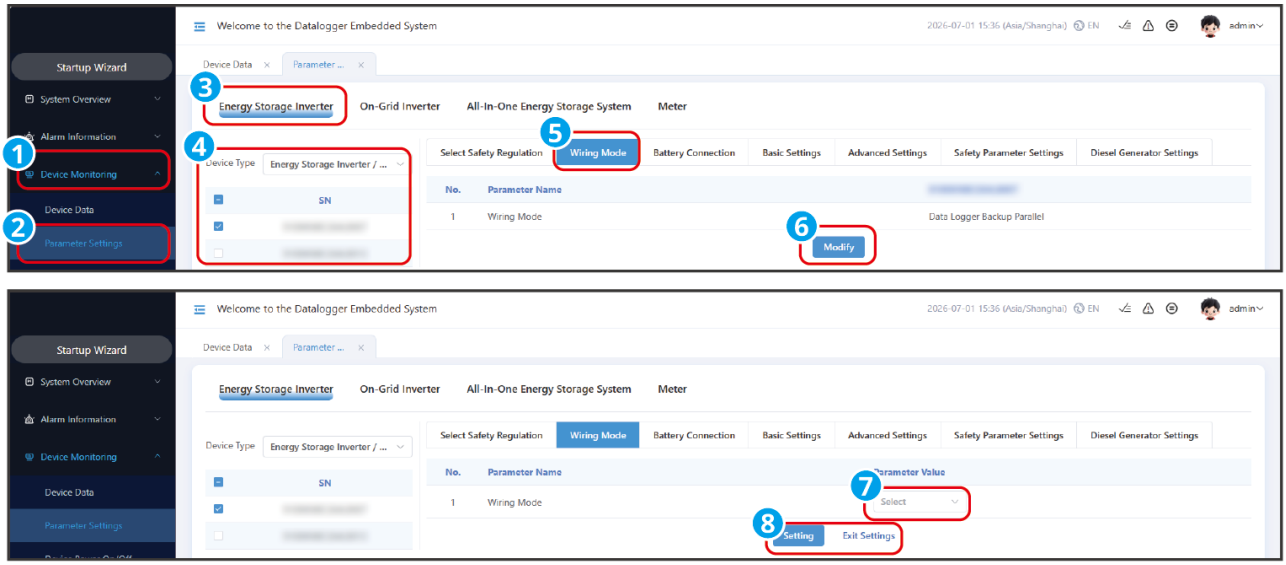

SEC30CCON0093

7.5.1.3 Set Battery Connection Parameters

Operating steps:

1. Go to "Device Monitoring" > "Parameter Settings" > "Energy Storage Inverter" to enter the parameter setting screen.
2. Select the device type and select the SN of the inverter to view or set.
3. Click "Battery Access" > "Modify", select the battery access method and battery model according to actual requirements, and click "Set" to complete the configuration.

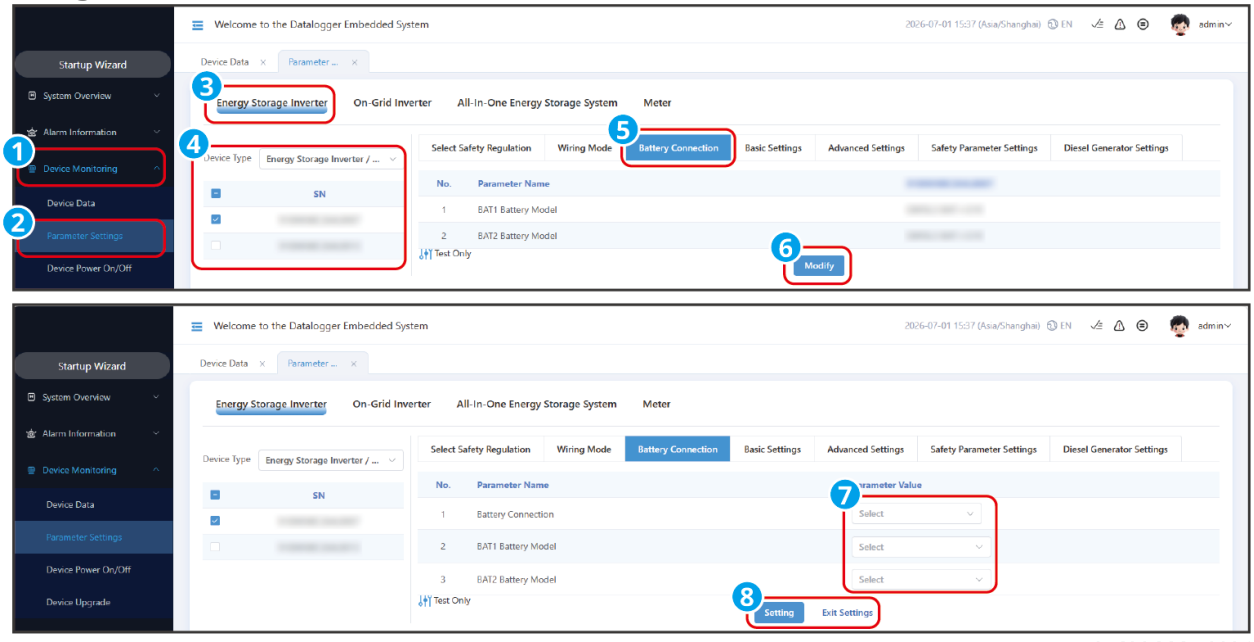

SEC30CCON0094

7.5.1.4 Set General Data for Energy Storage Inverter

Operating steps:

1. Go to "Device Monitoring" > "Parameter Settings" > "Energy Storage Inverter" to enter the parameter setting screen.
2. Select the device type and select the SN of the inverter to view or set.
3. Select the parameters to view or set, and click Read to query the current value of the selected parameter. To modify, enter the "Modification Item" and click "Set", then click "View Result" to check whether the modification was successful.

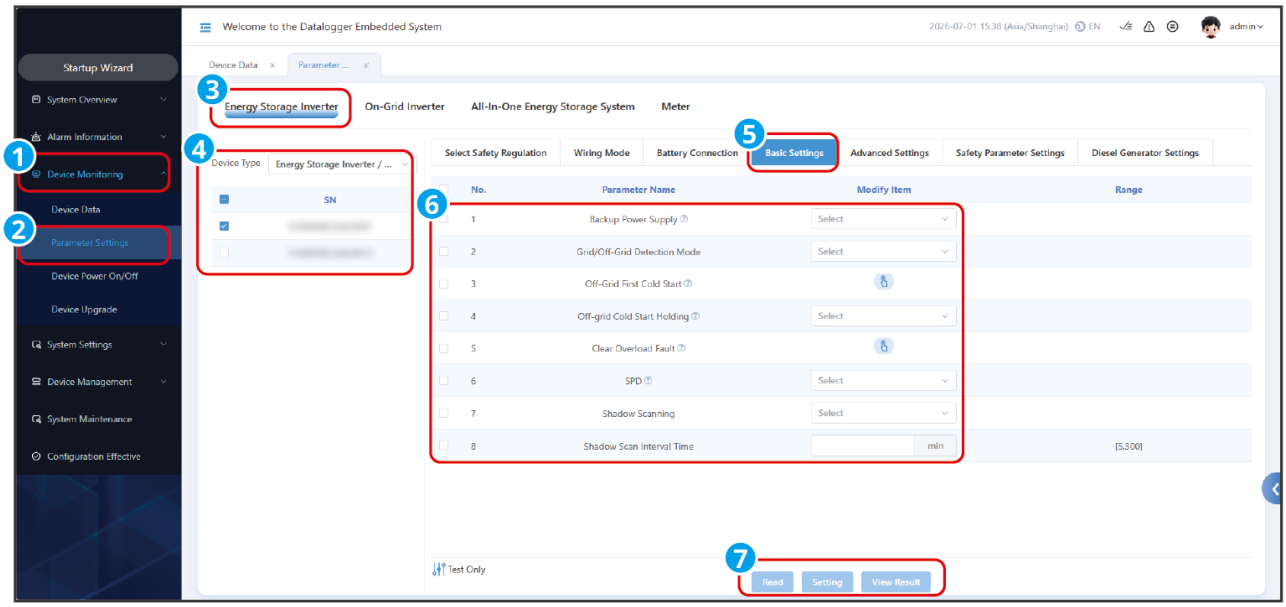

SEC30CCON0095

No.	Parameter Name	Description
1	Backup Power Supply	After the Backup Power Supply function is set, when a Grid Power Outage occurs, the loads connected to the BACKUP port of the inverter can be powered by the battery, ensuring uninterrupted power supply to the loads.

No.	Parameter Name	Description
2	UPS Detection Mode	• UPS mode - Full-wave detection: detects whether the grid voltage is too high or too low. • UPS mode - Half-wave detection: detects whether the grid voltage is too low. • EPS mode - LVRT supported: disables the grid voltage detection function.
3	First Off-grid Cold Start	Takes effect only once. After this function is enabled, the battery or PV can be used to provide backup power in off-grid mode.
4	Off-grid Cold Start Holding	Takes effect multiple times. After this function is enabled, the battery or PV can be used to output backup power in off-grid mode.
5	Clear Overload Fault	When the load power connected to the inverter's BACK-UP port exceeds the rated load power, the inverter will restart and detect the load power again. If not handled in time, the inverter will restart multiple times and perform load detection, with the interval between each restart continuously extending. After the load power of the BACK-UP port is reduced to within the rated power range, you can click this switch to clear the inverter restart interval time, and the inverter will restart immediately.
6	Surge Protection Alarm	After the SPD Level-2 Surge Protection Alarm function is enabled, an alarm will be reported if the surge protection module is abnormal.
7	Shadow Scan	When PV modules are severely shaded, enabling the Shadow Scan function can optimize the inverter's power generation Efficiency. After enabling, the shadow scan interval can be set according to actual requirements.

7.5.1.5 Set Advanced Parameters for Energy Storage Inverter

Operating steps:

1. Go to "Device Monitoring" > "Parameter Settings" > "Energy Storage Inverter" to enter the parameter setting screen.
2. Select the device type and select the SN of the inverter to view or set.
3. Select the parameters to view or set, and click Read to query the current value of the selected parameter. To modify, enter the "Modification Item" and click "Set", then click "View Result" to check whether the modification was successful.

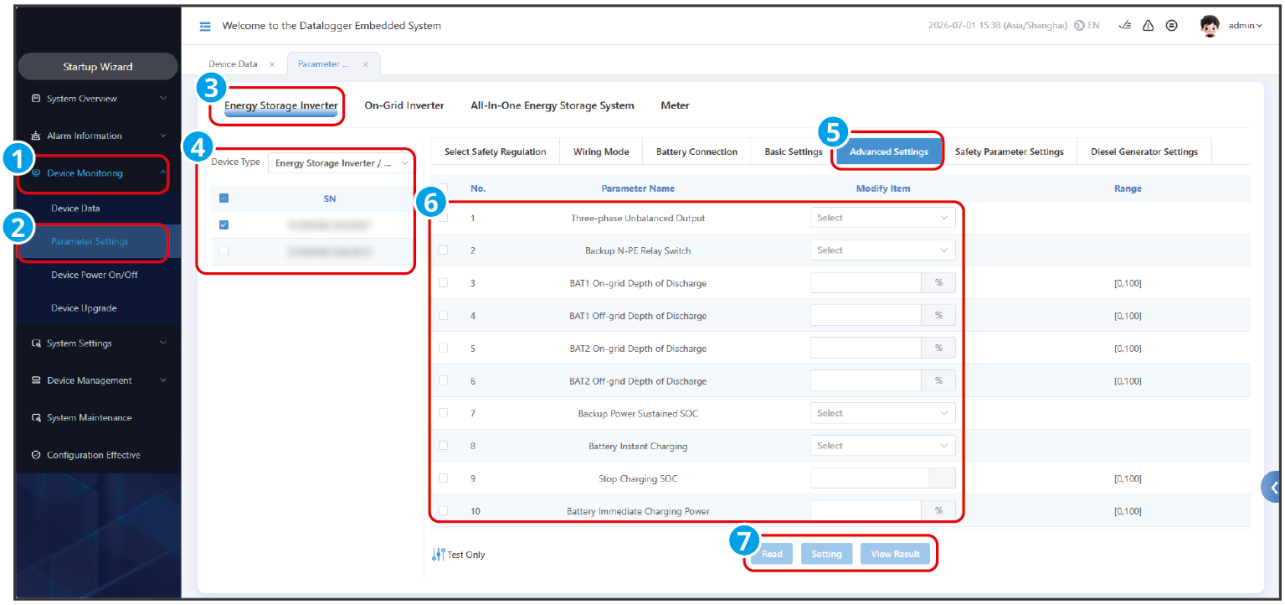

SEC30CCON0096

No.	Parameter Name	Description
1	Three-phase Unbalanced Output	When the grid uses split-phase billing, the three-phase unbalanced function needs to be enabled.
2	Backup Power N and PE Relay Switch	According to the grid code requirements of some countries or regions, during off-grid operation, it is necessary to ensure that the internal relay of the BACK-UP port remains closed, thereby connecting the N and PE lines.
4	BAT1/2 Off-Grid Depth of Discharge	The maximum percentage of battery capacity that can be discharged when the inverter is grid-connected or off-grid.

No.	Parameter Name	Description
5	Backup Power Sustained SOC	To ensure that the battery SOC is sufficient to maintain normal system operation during off-grid operation, when the system is grid-connected, the battery will be charged via the grid or PV to the set SOC Protection value.
6	Immediate Charging Enable	After enabling, the grid immediately charges the battery. Takes effect only once. Select enable or stop according to actual needs.
7	SOC for Stopping Charging	When Immediate Charging is enabled, charging the battery will stop when the battery SOC reaches the charging cutoff SOC.
8	Immediate Charging Power	When Immediate Charging is enabled, the percentage of the charging power to the inverter Rated Power. For example, for an inverter with a Rated Power of 10 kW, when set to 60, the charging power is 6 kW.
9	AFCI Detection Switch	• After enabling the AFCI Detection function, you can monitor whether the device has an arc hazard. • Click "Arc Failure Self-Test" to start the self-test of the Arc Detection module and confirm whether the status is normal. View the result through "Arc Failure Status". • If the inverter triggers an Arc Failure alarm less than 5 times within 24 hours, the alarm can be automatically cleared. After the fifth Arc Failure alarm, the inverter shuts down for Protection. You need to click "Clear Arc Alarm" to clear the fault before the inverter can work normally.

No.	Parameter Name	Description
10	PV Access Mode	• Independent Access: The PV strings are connected to the inverter-side MPPT ports in a one-to-one correspondence. • Partial Parallel Access: When one PV string is connected to multiple MPPT ports on the inverter side, other PV modules are also connected to other MPPT ports on the inverter side. • Parallel Access: When an external PV string is connected to the PV input ports on the inverter side, one PV string is connected to multiple PV input ports.
11	PX Curve	After enabling this function, the inverter will adjust three-phase power according to the grid voltage value to ensure maximum power utilization and prevent voltage rise as much as possible. If the default value does not meet requirements, you can modify the PX curve voltage threshold according to actual needs.

7.5.1.6 Set Generator Parameters

Operating steps:

1. Access the parameter settings screen via "Device Monitoring" > "Parameter Settings" > "Energy Storage Inverter".
2. Select the device type and select the SN of the inverter to view or set.
3. Select the parameters to view or set, and click Read to query the current value of the selected parameter. To modify, enter the "Modification Item" and click "Set", then click "View Result" to check whether the modification was successful.

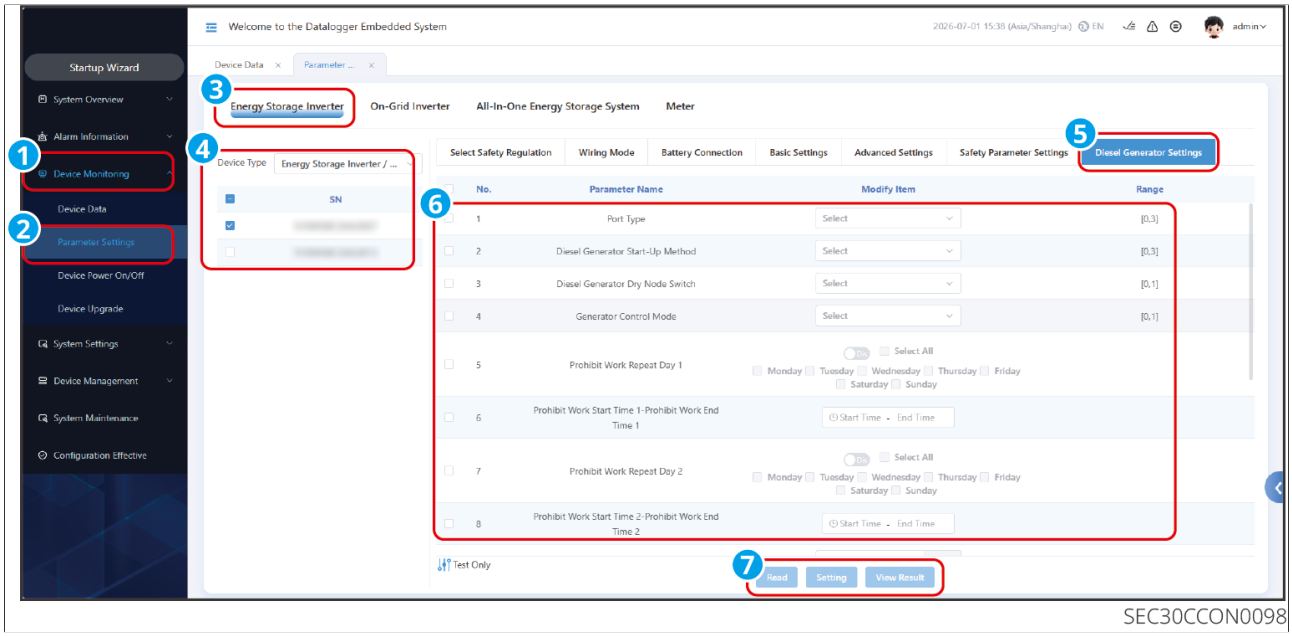

SEC30CCON0098

No.	Parameter Name	Description
1	Port Type	Only applicable to standalone scenarios. Select the device type connected to the inverter SMART port. • Diesel Generator Connection: Connect the diesel generator to the SMART port. • Load Connection: Connect the load to the SMART port. • Basic Mode: No device connected to the SMART port. • Microgrid Mode: Not supported by the current system.
2	Diesel Generator Startup Method	• Auto Control Diesel Generator (dry contact connection supported): Automatically control diesel generator start/stop according to the settings. • Manual Control Diesel Generator (dry contact connection not supported): The diesel generator must be manually controlled for start/stop; the inverter cannot control diesel generator start/stop. • Diesel Generator Not Installed: When no diesel generator is connected to the system, select Not Connected.

No.	Parameter Name	Description
3	Diesel Generator Dry Contact Switch	When the switch status is On, the diesel generator runs; after the diesel generator has run for the set running time, it can stop automatically.
4	Diesel Generation Control Mode	Diesel Generation Control Mode: The devices networked in a single-unit microgrid and a parallel microgrid are different; set according to the solution type. • Parallel Microgrid: When the STS type used in the system is 375K or 750K, set it to Parallel Microgrid. • Single-unit Microgrid: When the STS type used in the system is 125K, set it to Single-unit Microgrid.
5	Disable Working Day Repeat	Set the dates on which the diesel generator is prohibited from running.
6	Start Time of Prohibited Operation - End Time of Prohibited Operation	Set the prohibited Running Time Period of the diesel generator.
7	Rated Power	Set the Rated Power for diesel generator operation.
8	Running Time	Continuous running time after the diesel generator starts; the diesel generator stops after reaching this time. If the diesel generator start running time includes a prohibited working time, the diesel generator stops during this time period; after the prohibited working time, the diesel generator restarts running and timing.
9	Upper Voltage Limit	Set the Voltage Range for diesel generator operation.
10	Lower Voltage Limit	

No.	Parameter Name	Description
11	Frequency Upper Limit	Set the Frequency Range for generator operation.
12	Frequency Lower Limit	
13	Warm-up Time	Set the no-load warm-up time of the generator.
14	Max. Charging Power	The charging power when the generator supplies power to charge the battery.

7.5.1.7 Set Custom Safety Parameters for Energy Storage Inverter

NOTICE

- Grid code parameters must be set according to the requirements of the grid company. Any changes require the grid company's approval.
- For more information on grid code parameter descriptions, refer to11.1.Custom Safety Parameters(Page 166)chapter.

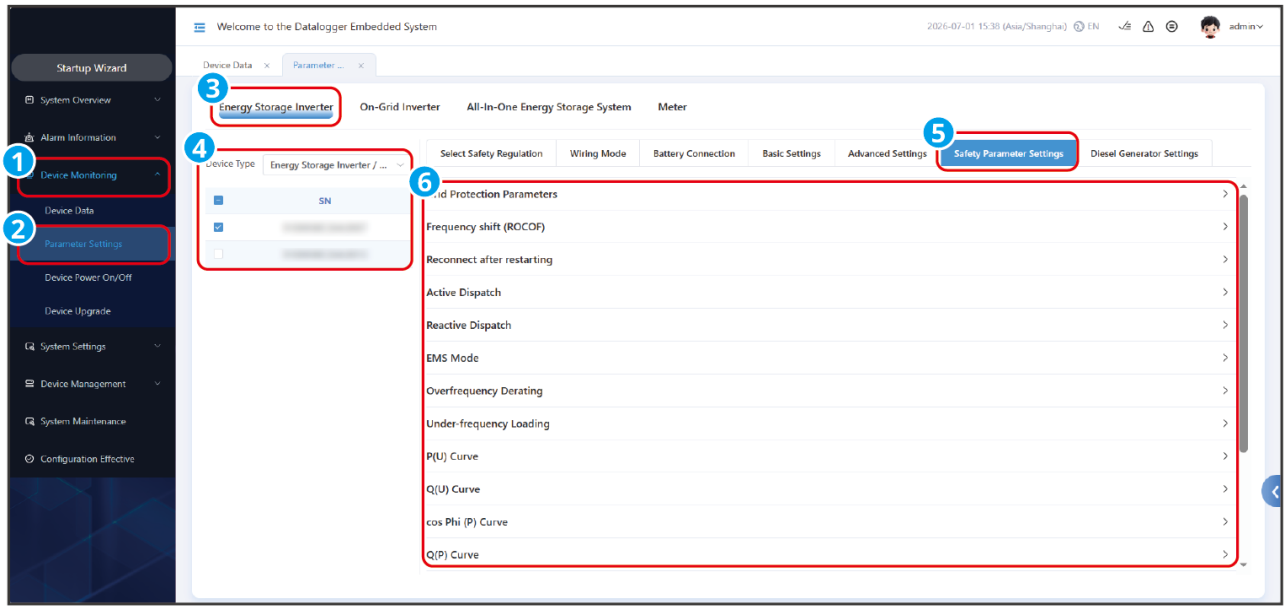

SEC30CCON0097

7.5.2 Set Meter Parameters

Procedure for setting meter parameters

1. Via "Device Monitoring" > "Parameter Settings" > "Meter" > "Parameter Settings" to enter the parameter setting screen.
2. To modify, enter the "Modification Value" and click "Set". If there is any problem with the meter or CT wiring, you can directly modify the corresponding phase sequence and other parameters according to the actual wiring without rewiring.

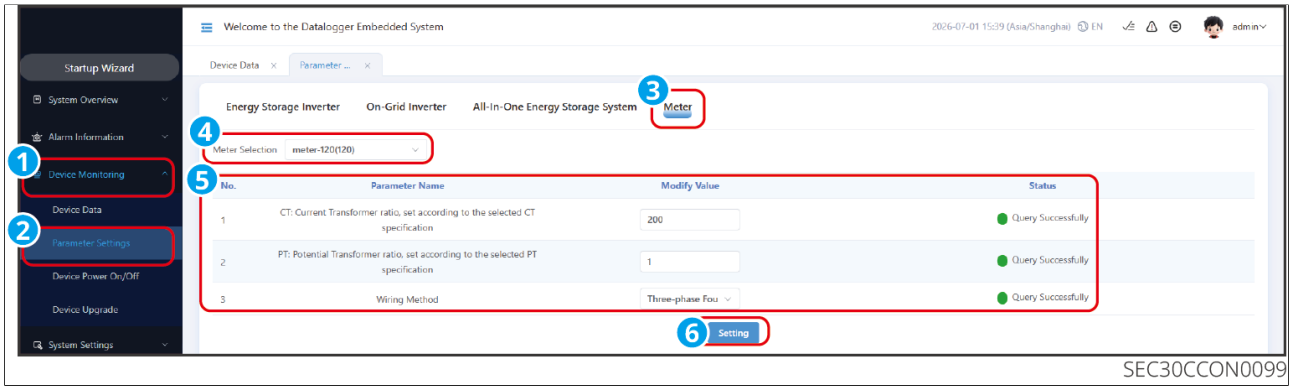

SEC30CCON0099

No.	Parameter Name	Description
1	CT ratio	Set the ratio of CT primary-side current to secondary-side current.
2	PT ratio	Set the ratio of PT primary voltage to secondary voltage.
3	Wiring method	Set the meter connection mode according to actual conditions.

Meter Connect Check Steps

Only applicable to some devices; refer to the actual device.

1. Via "Device Monitoring" > "Parameter Settings" > "Meter" > "Parameter Settings" to enter the parameter setting screen.
2. Click "Start Check" to automatically identify the meter wiring sequence and status. If the wiring sequence is reversed or misconnected, the wiring sequence can adapt

automatically without manual adjustment.

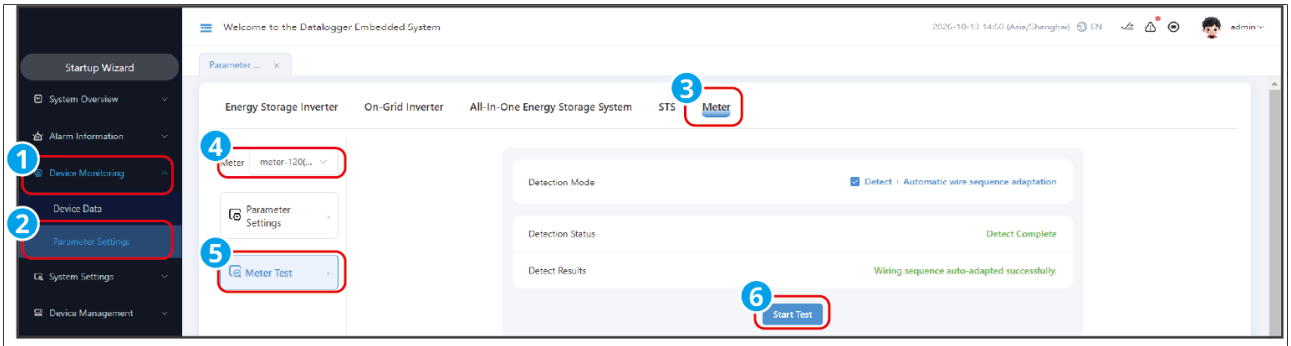

SEC30CCON0142

7.5.3 Set Grid-Tied Inverter Parameters

NOTICE

- Different inverter models require different parameter settings. Refer to the actual interface.
- When you need to enable or disable a function, enter 0 or 1. 0 indicates disabling a function, and 1 indicates enabling a function.

Procedure

1. Access the parameter settings screen via 'Device Monitoring' > 'Parameter Settings' > 'Grid-connected Inverter'.
2. Select the device type and select the SN of the inverter to view or set.
3. Select the parameters to view or set. Click 'Query' to query the current values of the selected parameters. To modify, enter the 'Modification Value' and click 'Modify', then click 'View Result' to check whether the modification is successful.

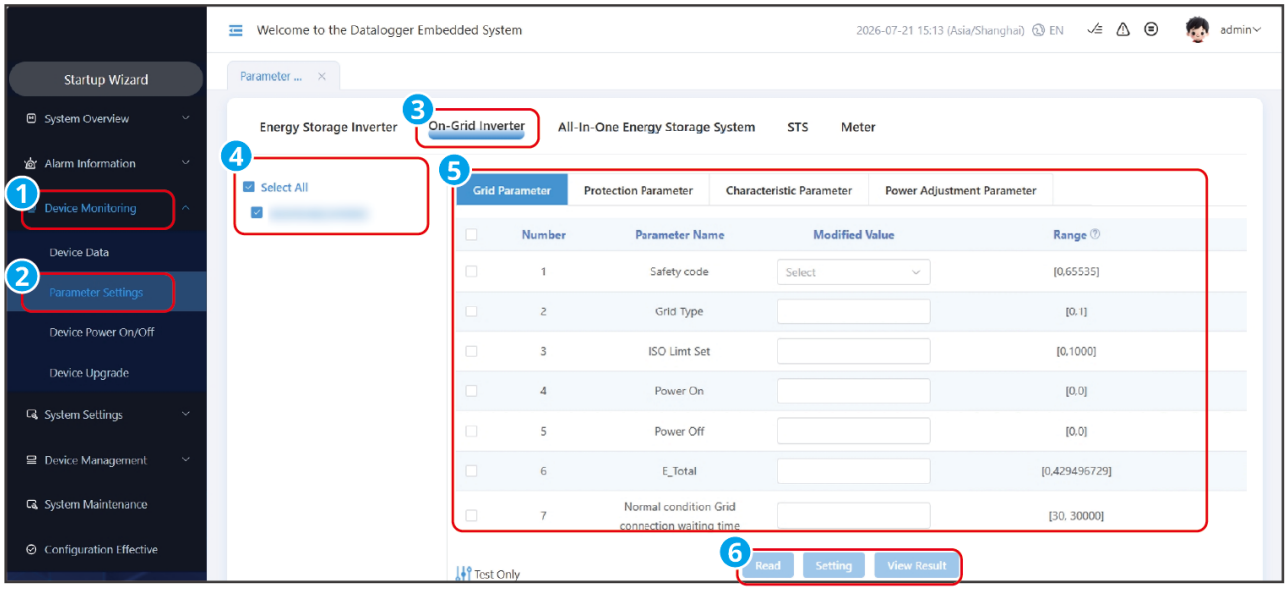

SEC30CCON0140

Grid parameters

No.	Parameter Name	Description
1	Safety Code	Set according to the country where the inverter is located/region's grid standard and the inverter application scenario.
2	Surge protection module detection switch	Enable or disable the surge protection module detection function.
3	Start	Issue a start command.
4	Shutdown	Issue a shutdown command.
5	AC Wiring Mode	• Set whether the inverter output includes an N line according to the inverter application scenario. • 0 indicates a three-phase four-wire system (3W/PE), and 1 indicates a three-phase five-wire system (3W/N/PE).

No.	Parameter Name	Description
6	Shadow MPPT function switch	When the inverter is used in scenarios with significant shading of PV strings, if this function is enabled, the inverter will perform a globalMPPTscan at intervals to find the maximum power point.
7	Active power fixed-value derating	Adjust the inverter's active power output according to a fixed value.
8	Active power percentage derating	Adjust the inverter's active power output according to a percentage of the Rated Power.
9	Reactive Power Compensation (PF)	Set the Power Factor of the inverter.
10	Reactive Power Compensation (Q/S)	Set the reactive power output of the inverter.
11	Reactive Power Compensation fixed value	Adjust the inverter's reactive power output according to a fixed value.
12	Nighttime Reactive Power Enable	Enable or disable the nighttime reactive power function. In certain application scenarios, the grid company requires the inverter to perform Reactive Power Compensation at night to ensure that the Power Factor of the local grid meets the requirements.

No.	Parameter Name	Description
13	Nighttime Reactive Power Parameter Effective	When this setting is enabled, the inverter outputs reactive power according to the fixed value configured for nighttime Reactive Dispatch compensation; otherwise, the inverter executes according to remote dispatch commands.
14	Nighttime Reactive Dispatch Percentage	During nighttime Reactive Power Compensation, reactive power dispatch is performed as a percentage.
15	Nighttime Reactive Dispatch	During nighttime Reactive Power Compensation, reactive power dispatch is performed as a fixed value.

Feature Parameters

No.	Parameter Name	Description
1	European One-Click Shutdown Enable	Enable or disable the European One-Click Shutdown function.
2	Anti-PID Function Enable	Enable or disable the Anti-PID function.
3	PID Recovery Function Switch	Enable or disable the PID Recovery function.
4	Power Limit Switch	Enable or disable the Power Limit function.

No.	Parameter Name	Description
5	Single-Unit Power Limit Upstream Power Percentage	Set the reverse-flow upstream power as a percentage.
6	Three-Phase Power Limit Method Selection	Set the Power Limit mode. 0 indicates that the total three-phase power cannot reverse flow; 1 indicates that any phase cannot reverse flow.
7	External Meter CT Ratio	Set the meter CT ratio.
8	ISO Threshold	To provide Protection for equipment safety, the inverter detects the insulation resistance from the input side to ground during startup self-check. If the detected value is below the ISO Threshold, the inverter will not connect to the grid.
9	NPE Overvoltage Fault Detection Switch	Enable or disable N-PE overvoltage fault detection.
10	N-PE Fault Threshold	N-PE Overvoltage Fault Threshold

No.	Parameter Name	Description
11	Active Power Dispatch Response Mode	• Set the Active Power Dispatch Response mode. Supported: slope mode or first-order low-pass filter mode. • 0: Disabled; 1 indicates slope mode; 2 indicates first-order low-pass time constant; 3 indicates first-order low-pass response time.
12	Active Power Ramp Rate	Set the inverter active power ramp rate.
13	Active Dispatch low-pass filter time parameter	Set the Active Dispatch low-pass filter time parameter.
14	Reactive Power Dispatch Response Mode	• Set the Reactive Power Dispatch Response mode. Supported: slope mode or first-order low-pass filter mode. • 0: Disabled; 1 indicates slope mode; 2 indicates first-order low-pass time constant; 3 indicates first-order low-pass response time.
15	Reactive Power Ramp Rate	Set the inverter reactive power ramp rate.
16	Reactive Dispatch low-pass filter time parameter	Set the Reactive Dispatch low-pass filter time parameter.

Protection Parameters

No.	Parameter Name	Description
1	Overvoltage Trigger n-Level Value	Set the grid n-level overvoltage Protection point. n=1,2.
2	Overvoltage Trigger n-Level Trip Time	Set the grid n-level overvoltage Protection time. n=1,2.
3	Undervoltage Trigger n-Level Value	Set the grid n-level undervoltage Protection point. n=1,2.
4	Undervoltage Trigger n-Level Trip Time	Set the grid n-level undervoltage Protection time. n=1,2.
5	Phase Voltage n-Level Overvoltage Protection Value	Set the grid n-level overvoltage Protection point. n=3,4.
6	Phase Voltage n-Level Overvoltage Protection Time	Set the grid n-level overvoltage Protection time. n=3,4.

No.	Parameter Name	Description
7	10min Over-voltage Trigger Value	Set the 10-minute overvoltage Protection point.
8	10min Over-voltage Trip Time	Set the 10-minute overvoltage Protection time.
9	Overfrequency trigger stage-n value	Set the grid stage-n overfrequency Protection point. n=1,2.
10	Overfrequency trigger stage-n trip time	Set the grid stage-n overfrequency Protection time. n=1,2.
11	Underfrequency trigger stage-n value	Set the grid stage-n underfrequency Protection point. n=1,2.
12	Underfrequency trigger stage-n trip time	Set the grid stage-n underfrequency Protection time. n=1,2.

No.	Parameter Name	Description
13	Stage-n overfrequency Protection value	Set the grid stage-n overfrequency Protection point. n=3,4.
14	Stage-n overfrequency Protection time	Set the grid stage-n overfrequency Protection time. n=3,4.
15	Stage-n underfrequency Protection value	Set the grid stage-n underfrequency Protection point. n=3,4.
16	Stage-n underfrequency Protection time	Set the grid stage-n underfrequency Protection time. n=3,4.
17	Startup On-Grid voltage upper limit	Standards in some countries/regions require that, when the device is started up and connected to the grid for the first time, the device is not allowed to connect to the grid if the grid voltage is higher than the set value of the Startup On-Grid voltage upper limit.
18	Startup On-Grid voltage lower limit	Standards in some countries/regions require that, when the device is started up and connected to the grid for the first time, the device is not allowed to connect to the grid if the grid voltage is lower than the set value of the Startup On-Grid voltage lower limit.

No.	Parameter Name	Description
19	Startup On-Grid frequency upper limit	Standards in some countries/regions require that, when the device is started up and connected to the grid for the first time, the device is not allowed to connect to the grid if the grid frequency is higher than the set value of the Startup On-Grid frequency upper limit.
20	Startup On-Grid frequency lower limit	Standards in some countries/regions require that, when the device is started up and connected to the grid for the first time, the device is not allowed to connect to the grid if the grid frequency is lower than the set value of the Startup On-Grid frequency lower limit.
21	Startup On-Grid waiting time	Set the waiting time for device startup when the device is started up and connected to the grid for the first time.
22	Startup On-Grid power loading rate	Set the loading rate at which power gradually increases during device startup when the device is started up and connected to the grid for the first time.
23	Reconnection grid-connection voltage upper limit	Standards in some countries/regions require that, after the inverter shuts down due to fault Protection, the inverter is not allowed to reconnect to the grid if the grid voltage is higher than the set value of the reconnection grid-connection voltage upper limit.
24	Reconnection Grid Voltage Lower Limit	Standards in some countries/regions require that after the inverter performs a fault Protection shutdown, the inverter is not allowed to reconnect to the grid when the grid voltage is below the set value of the Reconnection Grid Voltage Lower Limit.

No.	Parameter Name	Description
25	Reconnection Grid Frequency Upper Limit	Standards in some countries/regions require that after the inverter performs a fault Protection shutdown, the inverter is not allowed to reconnect to the grid when the grid voltage is above the set value of the Reconnection Grid Frequency Upper Limit.
26	Reconnection Grid Frequency Lower Limit	Standards in some countries/regions require that after the inverter performs a fault Protection shutdown, the inverter is not allowed to reconnect to the grid when the grid frequency is below the set value of the Reconnection Grid Frequency Lower Limit.
27	Reconnection Grid-Connection Waiting Time	The time interval for the inverter to reconnect to the grid after the grid voltage and frequency return to normal.
28	Reconnection Grid-Connection Power Ramp Rate	According to standards in some countries or regions, when the inverter is not connecting to the grid for the first time, this is the percentage of power increment that can be output per minute. For example, when set to 10, the reconnection ramp rate is 10%P/Srated%%.
29	LVRT Enable	Low Voltage Ride-Through means that when a temporary Low Voltage occurs due to grid abnormality, the inverter cannot immediately disconnect from the grid and needs to support for a period. Enabling this function turns on the inverter Low Voltage Ride-Through function.
30	LVRT Depth n	Set the voltage percentage of the characteristic points of the LVRT curve. n=1,2,3,4,5,6,7.
31	LVRT Hold Time n	Set the Duration of the characteristic points of the LVRT curve. n=1,2,3,4,5,6,7.

No.	Parameter Name	Description
32	LVRT Entry Judgment Threshold	Set the threshold for triggering Low Voltage Ride-Through. The threshold setting must comply with local grid standard requirements.
33	Low Voltage Ride-Through Exit Judgment Threshold	Set the threshold for exiting Low Voltage Ride-Through. The threshold setting must comply with local grid standard requirements.
34	LVRT Positive-Sequence Reactive Power K Value	During Low Voltage Ride-Through, the inverter needs to output positive-sequence reactive power to support the grid. This parameter is used to set the magnitude of the positive-sequence reactive power output by the inverter.
35	LVRT Zero Current Mode Enable	Standards in some countries/regions have requirements on the output current during Low Voltage Ride-Through. This parameter needs to be enabled. After setting, the output current during Low Voltage Ride-Through will be less than 10% of the Rated Current.
36	LVRT Zero Current Mode Entry Voltage Threshold	After enabling Zero Current Mode for LVRT, if during LVRT the grid voltage is less than the entry voltage threshold of Zero Current Mode for LVRT, the inverter operates in Zero Current Mode.
37	HVRT Enable	High Voltage Ride-Through means that when a temporary high voltage occurs due to grid abnormality, the equipment cannot immediately disconnect from the grid and needs to support for a period. Enabling this function turns on the inverter High Voltage Ride-Through function.

No.	Parameter Name	Description
38	HVRT Depth n	Set the voltage percentage for characteristic points of the HVRT curve. n=1,2,3,4,5,6,7.
39	HVRT ride-through duration n	Set the Duration of the characteristic point of the HVRT curve. n=1,2,3,4,5,6,7.
40	HVRT entry determination threshold	Set the threshold for triggering high voltage ride-through. The threshold setting must comply with local grid code requirements.
41	HVRT exit determination threshold	Set the threshold for exiting high voltage ride-through. The threshold setting must comply with local grid code requirements.
42	HVRT positive-sequence reactive K value	During high voltage ride-through, the equipment needs to output positive-sequence reactive power to support the grid. This parameter is used to set the amount of positive-sequence reactive power output by the equipment.
43	HVRT Zero Current Mode Enable	Standards in some countries/regions impose requirements on the output current during high voltage ride-through. This parameter must be enabled; after setting, the output current during high voltage ride-through will be less than 10% of the Rated Current.
44	HVRT Zero Current Mode entry voltage threshold	After enabling the HVRT Zero-Current Mode, during HVRT, if the grid voltage is higher than the entry voltage threshold of the HVRT Zero-Current Mode, operation is executed according to Zero Current Mode.

No.	Parameter Name	Description
45	Current Allocation Mode	• Set the allocation mode for reactive current and active current. • 0 represents reactive current priority; 1 represents active current priority; 2 represents constant current mode.
46	Active Power Recovery Mode After Ride-Through	• During fault ride-through recovery, the active current recovery mode supports slope recovery, first-order low-pass filter recovery, no requirement, etc. • 0 represents off; 1 represents slope response; 2 represents time constant; 3 represents response time
47	Active Power Recovery Rate After Ride-Through	During fault ride-through recovery, the speed at which the active current recovers to the active current value at the moment before the fault ride-through.
48	First-Order Low-Pass Filter for Active Power Recovery After Ride-Through	After fault ride-through ends, the active current recovers with a response characteristic of a first-order low-pass filter.
49	Reactive Power Recovery Mode After Ride-Through	• After fault ride-through ends, the reactive current recovery method supports slope recovery, first-order low-pass filter recovery, no requirement, etc. • 0 represents off; 1 represents slope response; 2 represents time constant; 3 represents response time

No.	Parameter Name	Description
50	Reactive Power Recovery Rate After Ride-Through	After fault ride-through ends, the reactive current recovers according to the slope value.
51	First-Order Low-Pass Filter for Reactive Power Recovery After Ride-Through	After fault ride-through ends, the reactive current recovers with a response characteristic of a first-order low-pass filter.
52	Frequency Ride-Through Enable Bit	After frequency ride-through is enabled, in the event of Grid Frequency Abnormal, the inverter can continue generating power within the required time.
53	Stage-n underfrequency ride-through frequency point_UFn	Frequency point for triggering underfrequency ride-through.
54	Stage-n underfrequency ride-through time_UTn	Underfrequency ride-through duration.

No.	Parameter Name	Description
55	Stage-n overfrequency ride-through frequency point_OFn	Frequency point for triggering overfrequency ride-through.
56	Stage-n overfrequency ride-through time_OTn	Overfrequency ride-through duration.

Power regulation parameters

No.	Parameter Name	Description
1	Overfrequency start point (slope mode)	Standards in some countries/regions require that when the grid frequency exceeds the overfrequency point, the active power output of the inverter be derated.
2	Overfrequency power Derating slope (slope mode)	In Slope mode, when the grid frequency exceeds the overfrequency point, this parameter defines the slope of the inverter's active power derating variation.
3	P-F curve (overfrequency)	Enable or disable overfrequency Derating.

No.	Parameter Name	Description
4	Underfrequency start point (slope mode)	Standards in some countries/regions require that when the grid frequency falls below the underfrequency point, the active power output of the inverter be increased.
5	Recovery power slope	Set the power recovery slope for exiting overfrequency Derating.
6	Frequency hysteresis point	Frequency point corresponding to the underfrequency hysteresis function.
7	Silent time	Silent waiting time for the underfrequency hysteresis function.
8	Overfrequency end point	Set the exit frequency for overfrequency derating.

7.5.4 Set Energy Storage Integrated Cabinet Parameters

7.5.4.1 Set Safety Country for Energy Storage Integrated Cabinet

Procedure

1. Access the parameter settings screen via "Device Monitoring" > "Parameter Settings" > "Energy Storage Integrated Cabinet".
2. Select the device SN to view or configure.
3. Click "Select Grid Code", select the grid code country according to actual requirements, and click "Parameter Download" to complete the configuration.

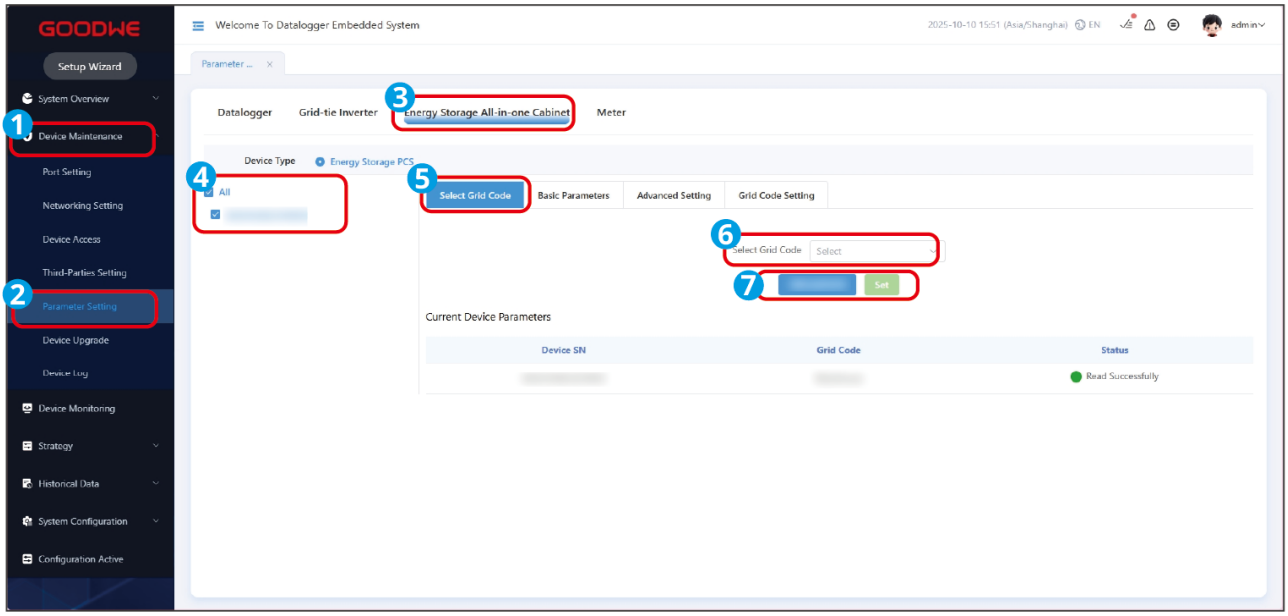

SEC30CCON0052

7.5.4.2 Set General Data for Energy Storage Integrated Cabinet

Procedure

1. Access the parameter settings screen via "Device Monitoring" > "Parameter Settings" > "Energy Storage Integrated Cabinet".
2. Select the device SN to view or configure.
3. Click "General Data", select the parameters to view or set, and click "Read" to query the current values of the selected parameters. To modify, enter the "Modification Item" and click "Set", then click "View Result" to check whether the modification succeeded.

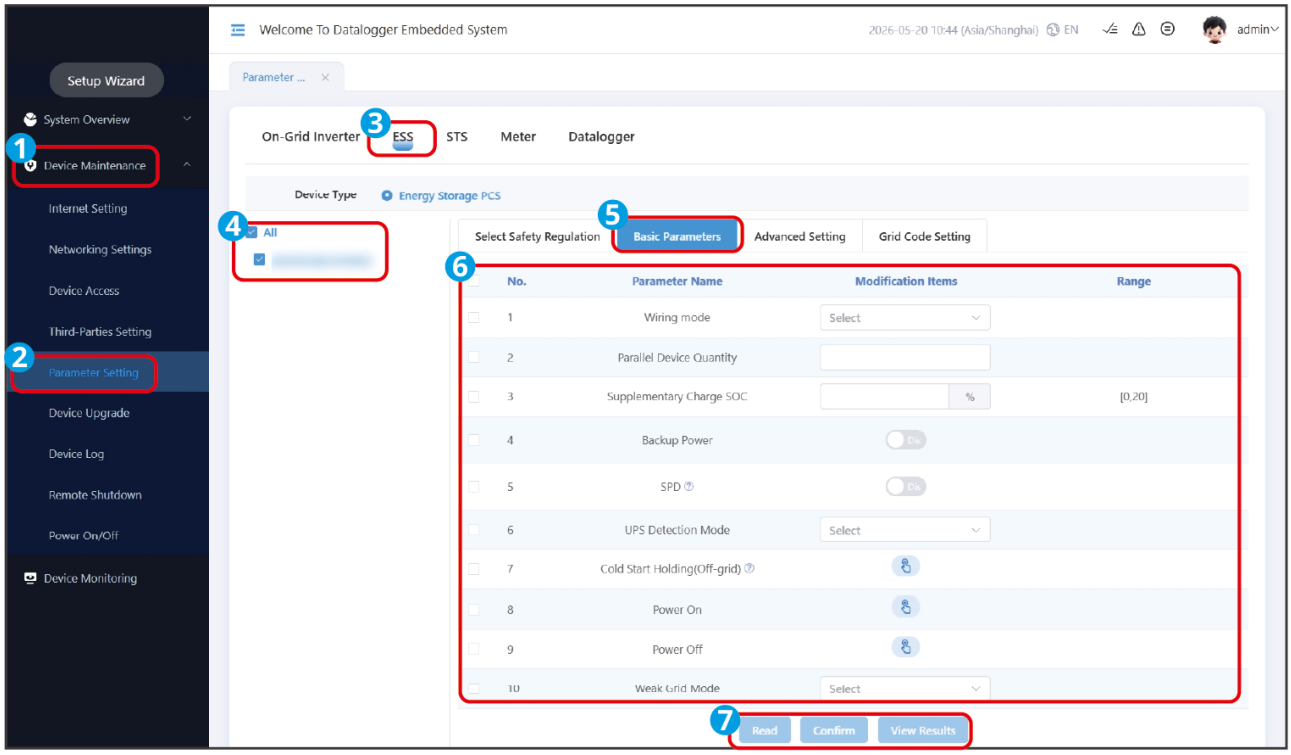

SEC30CCON0053

No.	Parameter Name	Description
1	Wiring Mode	Set the current system to single-unit or parallel operation according to the actual configuration. If parallel operation is used, the Parallel Networking mode must be selected.
2	Number of Parallel Units	Set the number of energy storage integrated cabinets in the parallel system.
3	Recharge SOC	• When the battery SOC in the system falls below the Recharge SOC (Battery SOC Low), the system will charge at the default charging power of 10 kW. • Ensure that the Recharge SOC is lower than the lower SOC limit.
4	Backup Power Supply	After configuring the backup power function, when a Grid Power Outage occurs, the inverter'sBACKUPport-connected load can be powered by the battery, ensuring uninterrupted power supply to the load.

No.	Parameter Name	Description
5	Surge Protection Alarm	After enablingSPDsecondary surge protection alarm function, when the surge protection module is abnormal, an alarm will indicate the abnormality.
6	UPS Detection Mode	• UPSMode-Full-wave detection: detects whether the grid voltage is too high or too low. • UPSMode-Half-wave detection: detects whether the grid voltage is too low. • EPSMode-Low voltage ride-through supported: disables the grid voltage detection function.
7	Off-grid Cold Start Holding	Takes effect multiple times. After this function is enabled, the battery or PV can be used to output backup power in off-grid mode.
8	Power On	Controls the power-on or power-off command of the energy storage system.
9	Shutdown	
10	Weak Grid Mode	For weak-grid areas, the Weak Grid Mode function can be enabled to ensure normal operation of the equipment. • Off: The weak grid support function is not enabled • High Impedance Mode: resolves the high-impedance issue caused by Weak Grid Mode and supports normal equipment operation

7.5.4.3 Set Advanced Parameters for Energy Storage Integrated Cabinet

Procedure

1. Access the parameter settings screen via "Device Monitoring" > "Parameter Settings" > "Energy Storage Integrated Cabinet".
2. Select the device SN to view or configure.
3. Click 'Advanced Parameters', select the parameters to view or set, and click 'Read' to query the current values of the selected parameters. To modify, enter the 'Modification Item' and click 'Set', then click 'View Result' to check whether the modification is successful.

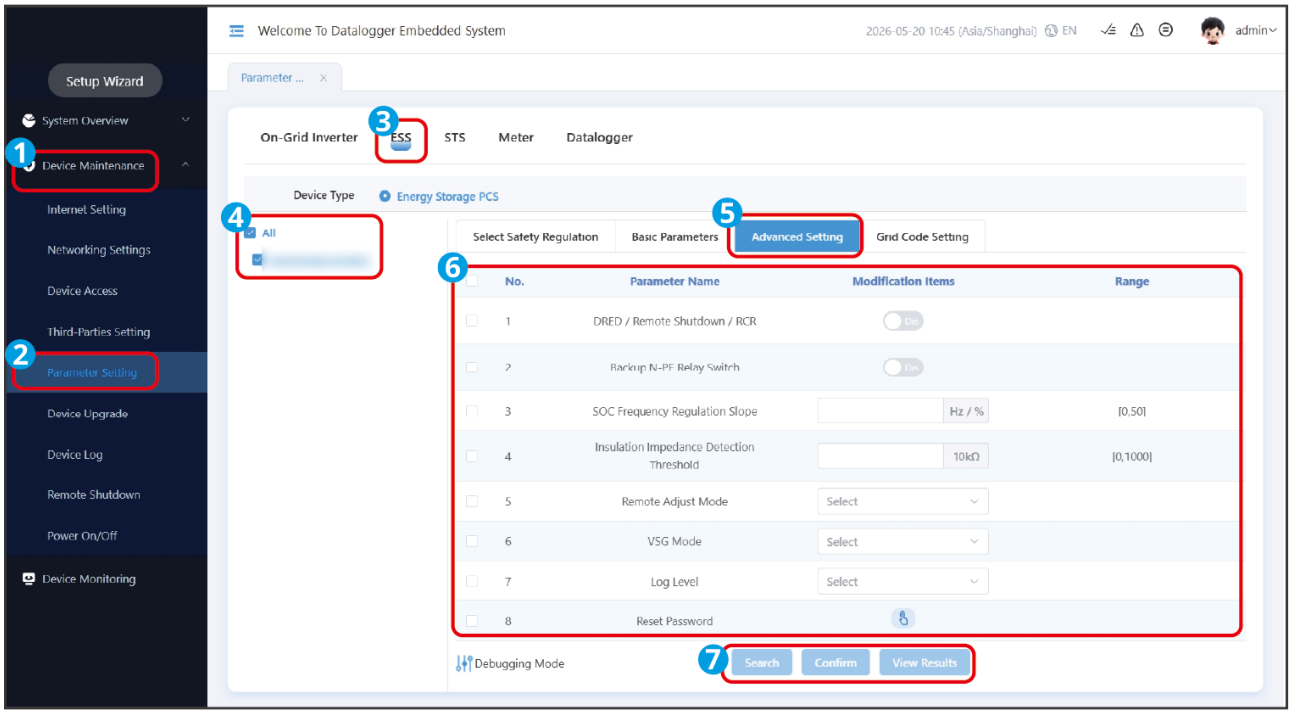

SEC30CCON0054

No.	Parameter Name	Description
1	DRED/Remote Shutdown/RCR	According to grid standard requirements in some countries or regions, third-party DRED/Remote Shutdown/RCR devices need to be connected to implement signal control.
2	Backup Power N and PE Relay Switch	According to the grid code requirements of some countries or regions, during off-grid operation, it is necessary to ensure that the internal relay of the BACK-UP port remains closed, thereby connecting the N and PE lines.
3	SOC Frequency Regulation Slope	When the system is off-grid, if the off-grid SOC is too high or too low, the inverter's over-frequency Derating or under-frequency loading must be achieved by adjusting the off-grid AC frequency. The SOC Frequency Regulation Slope is the AC frequency adjustment value.
4	PV Insulation Resistance Detection Threshold	Set the threshold for insulation detection. Default value: 50K.

No.	Parameter Name	Description
5	Remote Regulation Mode	After enabling, the SEC3000C automatically issues commands to the energy storage integrated cabinet, and the system executes the SEC3000C Control Mode.
6	VSG Mode	Disabled by default. When enabled, the system switches from the default PQ mode to VSG Mode.
7	Log Level	For internal commissioning use only.
8	Reset Password	Reset the connection password of the Intelligent communication stick Ezlink3000.

7.5.4.4 Set Custom Safety Parameters for Energy Storage Integrated Cabinet

NOTICE

- Grid code parameters must be set according to the requirements of the grid company. Any changes require the grid company's approval.
- For more information on grid code parameter descriptions, refer to11.1.Custom Safety Parameters(Page 166)chapter.

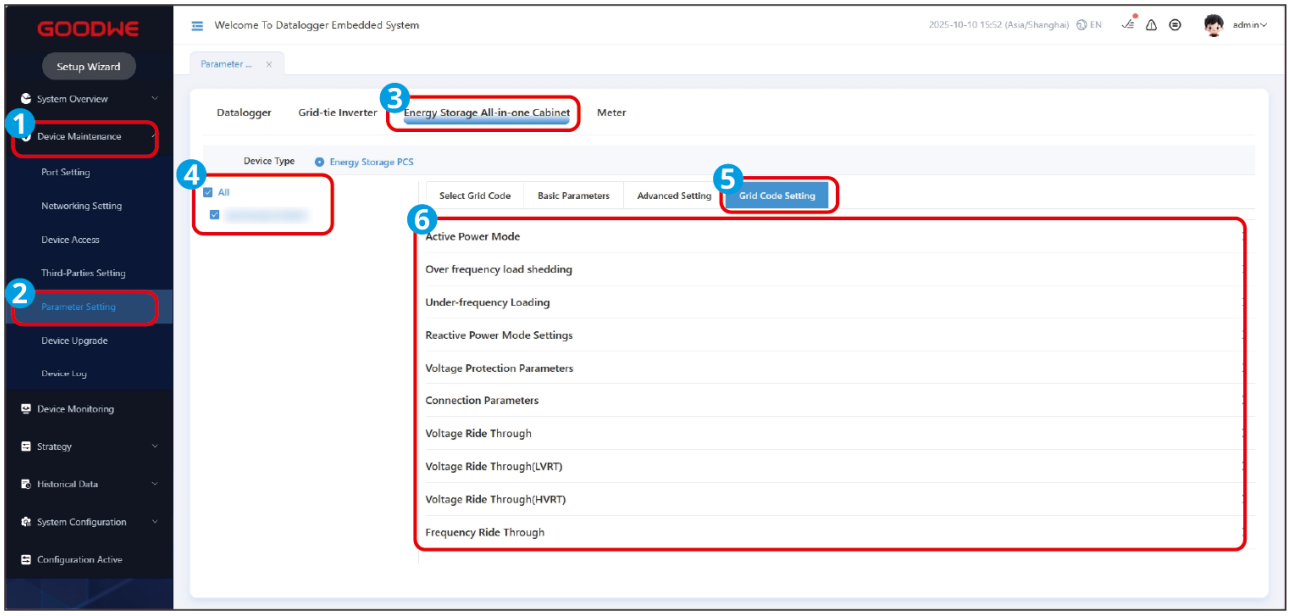

SEC30CCON0055

7.5.5 Set STS Parameters

Applicable to the scenario where ESA261 is used with STS.

Set STS port configuration

Select the device connected to the STS port according to the actual situation.

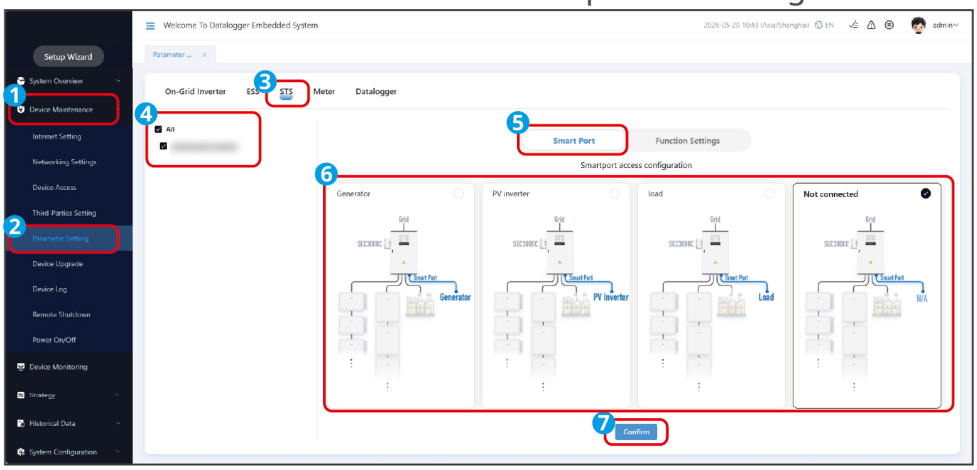

SEC30CCON0070

Set STS function parameters

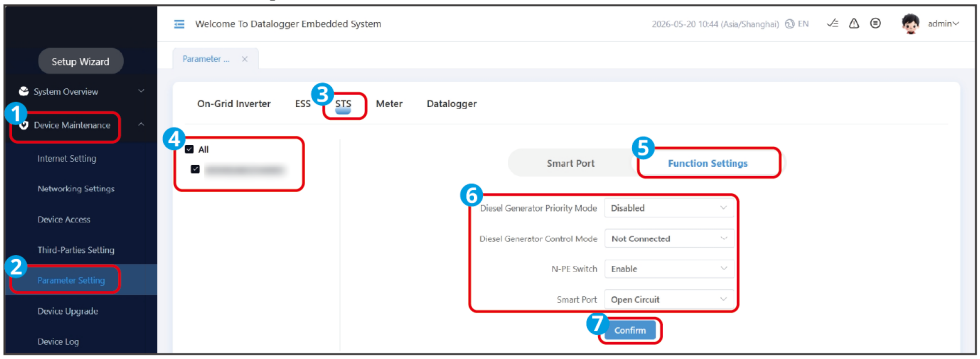

SEC30CCON0071

No.	Parameter Name	Description
1	Transfer cabinet diesel generator priority mode	When a diesel generator is connected to the smart-port of the STS and the transfer cabinet diesel generator priority mode is enabled, if Battery SOC Low is lower than the diesel generator start SOC, diesel generator charging is automatically triggered until the SOC upper limit.

No.	Parameter Name	Description
2	Diesel Generation Control Mode	Set the control mode between the diesel generator and STS according to the actual situation. DO control or RS485 control is supported.
3	N-PE switch	Disabled by default. Set it according to local regulatory requirements. After being enabled, when the system switches to off-grid mode, the N-PE switch automatically closes.
4	Intelligent Port	To power off or power on the device connected to the Intelligent Port, select open or close.

7.5.6 Device Power on/Off

Operating steps:

1. Go to the power-on/off screen through "Device Management" > "Device Power On/Off".
2. Select the device to be powered on/off, and click Power On or Power Off.

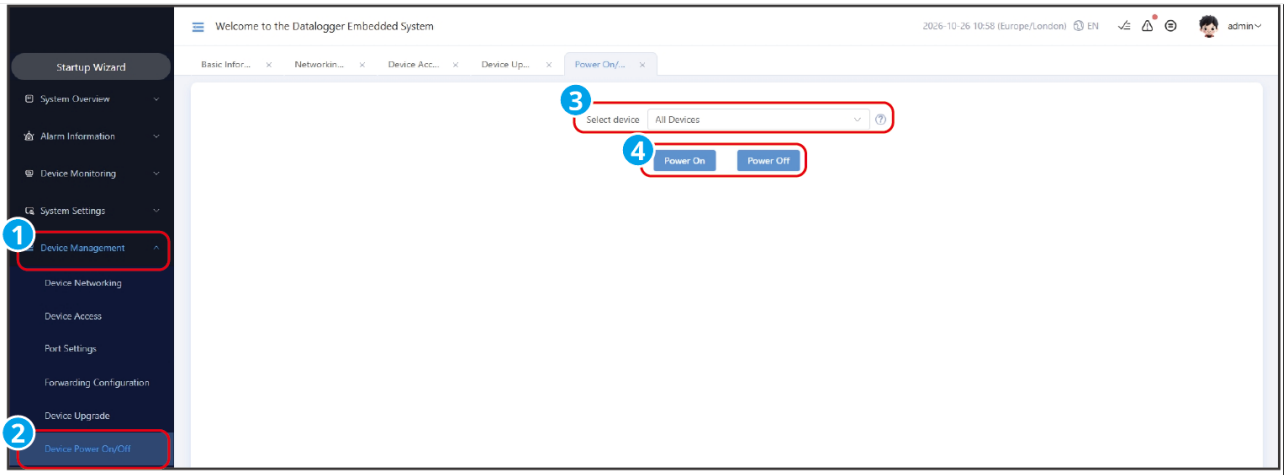

SEC30CCON0100

7.6 Set System Parameters

7.6.1 Set Grid Connection Control Parameters

7.6.1.1 Set the System Working Mode

NOTICE
Set the working mode of the SEC3000C. After the setting is complete, the integrated energy storage cabinet/inverter will be dispatched according to the SEC3000C, and no separate working mode setting is required.

Operating steps:

1. Go to 'System Settings' > 'Grid-Connected Control' > 'Working Mode' to enter the parameter setting screen.
2. In Working Mode Settings, set the working mode to Remote Dispatch Mode or Local Control Mode according to actual requirements. When set to 'Local Control Mode', the Control Strategy for system operation is not subject to third-party dispatch control; when set to Remote Dispatch Mode, system operation is controlled by a third-party platform.
3. Set the specific working mode according to actual requirements.

Remote Dispatch Mode

Send dispatch commands and control the system through a third-party remote monitoring platform or controller.

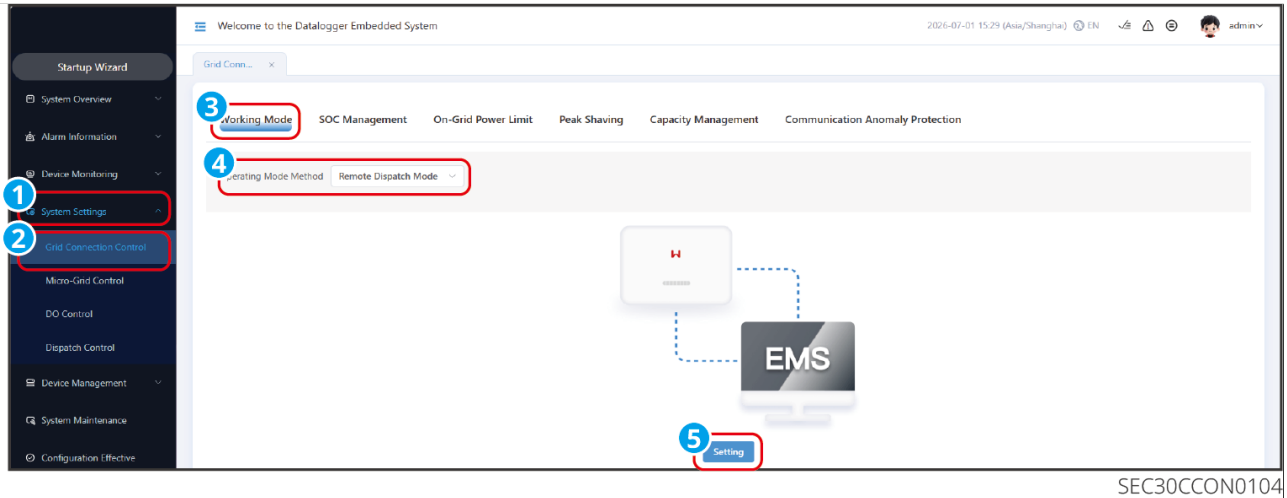

SEC30CCON0104

Self-consumption Mode

Self-consumption Mode is the default operating mode for local control.

Suitable for areas with high Tariff and low or no Export Tariff subsidy. PV power generation preferentially supplies loads, and surplus energy charges the energy storage system. If the battery is fully charged or charging at full power, the remaining energy is exported to the grid. When PV power generation cannot meet load demand, the energy storage system discharges to supply the load.

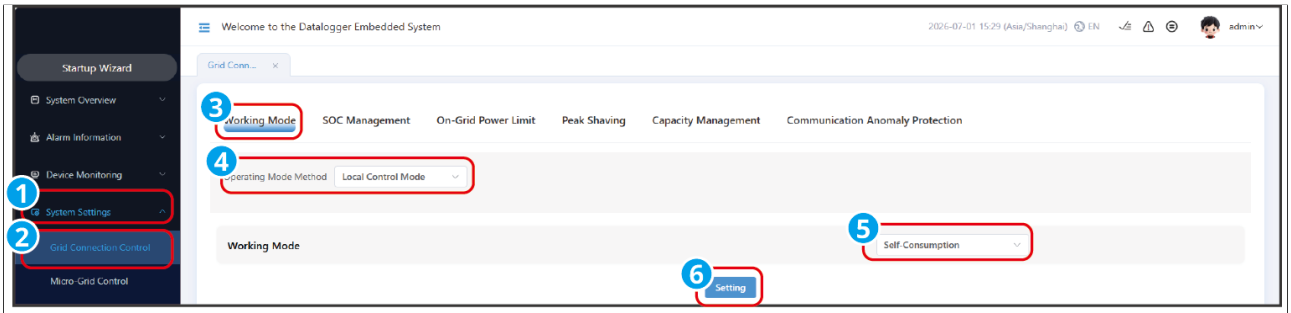

SEC30CCON0103

TOU Mode

Where permitted by local laws and regulations, set different time periods for energy purchase and Export Energy based on grid peak-valley Tariff differences. For example, during Tariff valley periods, set the energy storage system to charging mode to purchase energy from the grid for charging; during Tariff peak periods, set the energy storage system to discharging mode to supply loads from the battery.

- Surplus PV Energy Management: When PV Energy Generation is sufficient, surplus PV energy can be fed into the grid or used to charge the battery. When set to Export Priority, where permitted by local laws and regulations, surplus energy can be fed into the grid when PV Energy Generation is sufficient. When set to Charging Priority, after PV Energy Generation supplies load consumption, surplus energy is used to charge the energy storage system; after charging power reaches maximum or the energy storage is fully charged, remaining energy is fed into the grid.
- Grid Charging Max. Charging Power: The Max. Charging Power used when charging the energy storage equipment from the grid.

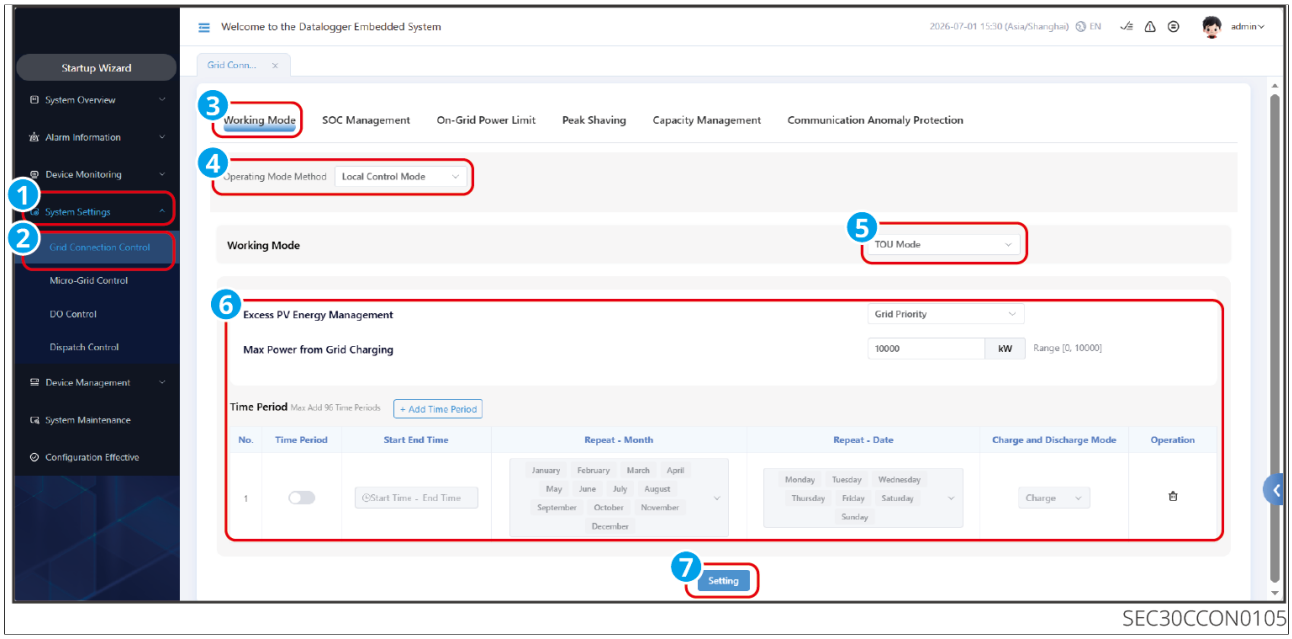

SEC30CCON0105

TOU Fixed Power Mode

Suitable for pure energy storage systems. Set charging and discharging time periods based on grid peak-valley Tariff differences; within the configured fixed time periods, the energy storage system charges and discharges according to actual demand. If charging and discharging are not set for a time period, any surplus PV power generation during that period can be used to charge the battery.

Supported modes: Charging, Discharging, and Self-consumption. When Self-consumption is selected, there is no need to set the charging/discharging power or cutoff SOC.

Surplus PV Energy Management: Effective only during time periods when neither charging nor discharging is active. When PV power generation is sufficient, surplus PV energy can be fed into the grid or used to charge the battery.

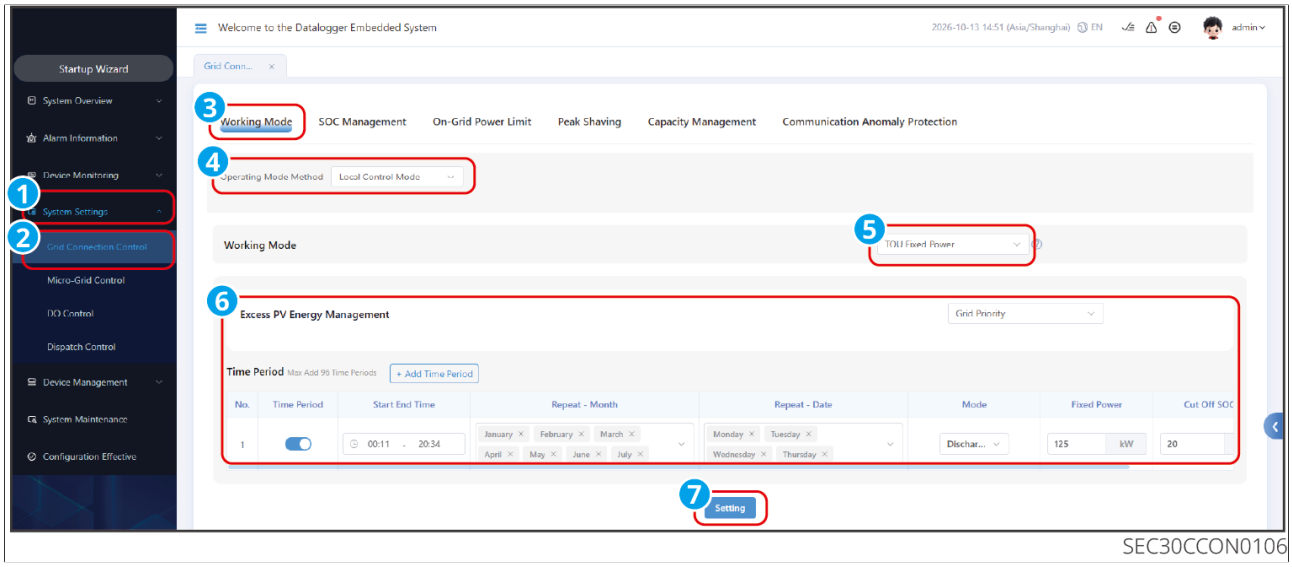

SEC30CCON0106

7.6.1.2 Set System SOC Management Function

NOTICE

- The SOC management function is enabled by default.
- In a Microgrid Scenario, set the SOC range of the integrated energy storage cabinet to 10%-90%.

Procedure

1. Go to "System Settings" > "Grid Connection Control" >"SOC Management" to enter the parameter setting screen.
2. Set the SOC upper and lower limits according to actual requirements.

- SOC upper limit: Charging of the battery stops when the battery SOC reaches the set value. Default: 95%.
- SOC lower limit: Battery discharging stops when the battery SOC reaches the set value. Default: 5%.

3. After setting, click "Set" to complete configuration.

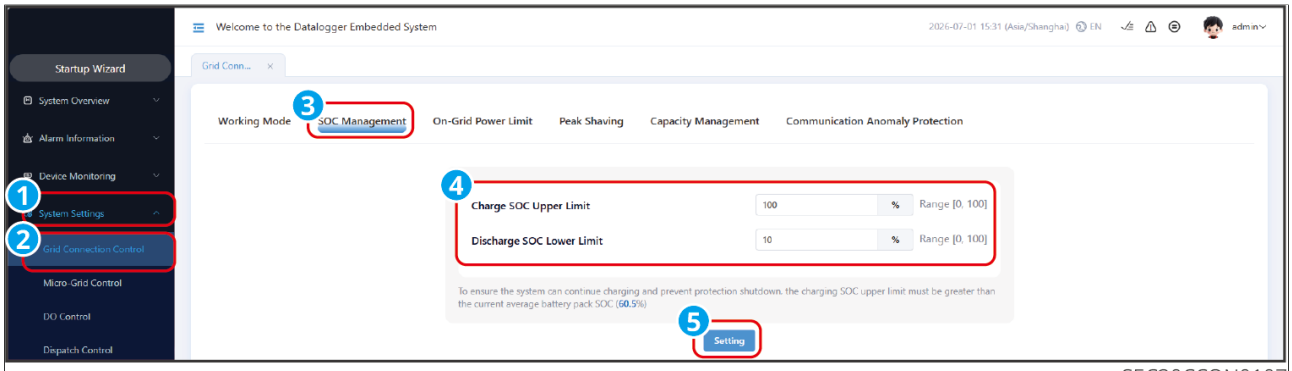

SEC30CCON0107

7.6.1.3 Set System Grid-Connected Power Limit

When all loads in the PV system cannot consume the energy generated by the system, the surplus energy will be fed into the grid. By setting the grid-connected power limit parameters, the Energy Generation fed into the grid can be controlled.

Procedure

1. Go to the parameter setting screen through "System Settings" > "Grid-connected Control" > "Grid-connected Power Limit".
2. Set the grid-connected power limit parameters according to actual requirements.

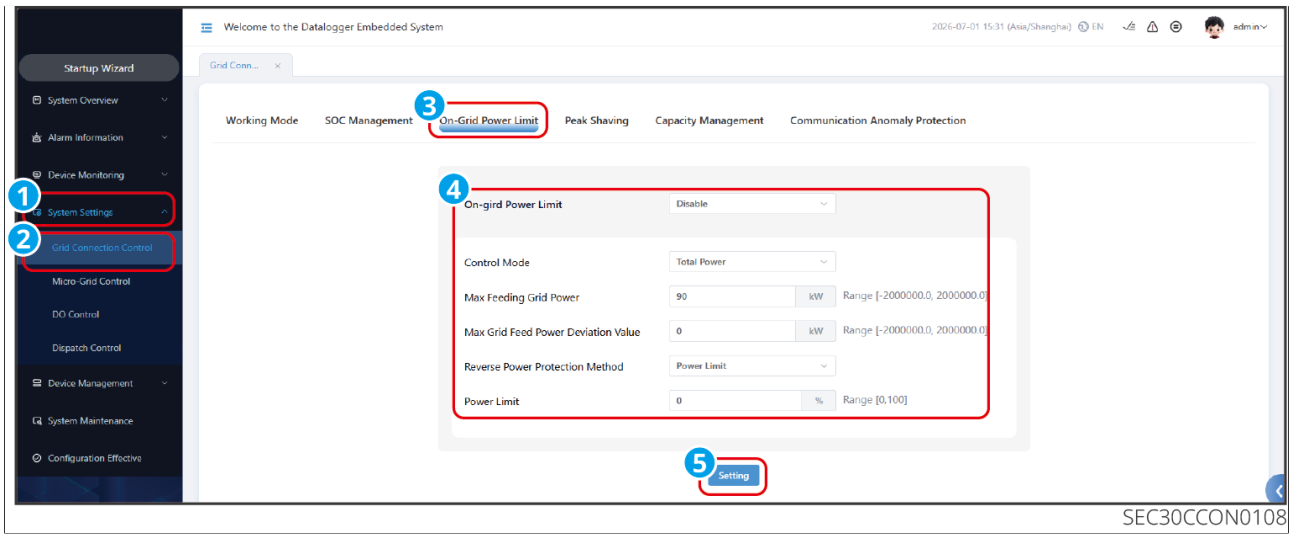

SEC30CCON0108

No.	Parameter Name	Description
1	Control Mode	Select the method for controlling the device output power according to actual conditions. • Total Power: Control the total power at the grid connection point so that it does not exceed the output power limit. • Per-phase Power: Control the power of each phase at the grid connection point so that none exceeds the output power limit.
2	Maximum Grid Feed-in Power	According to the requirements of certain countries or regions, set the Maximum Power that the device can actually feed into the grid.
3	Maximum Grid Feed-in Power Offset	• Set the adjustable range for the Maximum Power that the device can actually feed into the grid. • Maximum Power Delivered to Grid = Maximum Grid Feed-in Power + Maximum Grid Feed-in Power Offset.
4	Reverse Power Protection Mode	When reverse current occurs in the system for longer than the maximum Protection time(Default5s), the following Protection measures can be taken: • Power Limit: The device continues to operate at a percentage of Rated Power. • The device disconnects from the grid.

7.6.1.4 Set System Demand Management Function

Procedure

1. Go to "System Settings" > "Grid Connection Control" > "Demand Management" to enter the parameter setting screen.
2. Set Demand Management and sub-demand Demand Control Mode according to actual requirements.

- Demand Management: Mainly used in scenarios where the peak power for energy

purchase is limited. In grid-connected scenarios, it limits user energy purchase and uses battery discharge to supply power, ensuring that purchased energy does not exceed the grid peak limit.

- Sub-demand management: When multiple transformers are used in the system, set the Maximum Power value to ensure that the energy purchased through each transformer does not exceed its capacity.

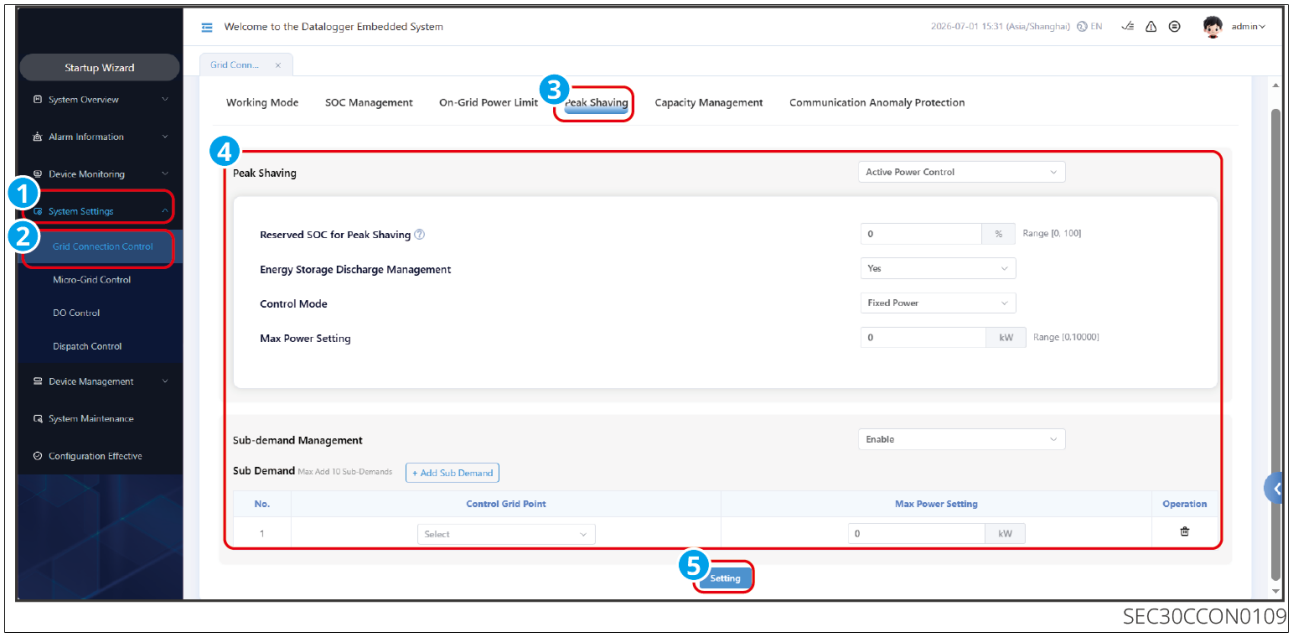

SEC30CCON0109

7.6.1.5 Set System Capacity Management

Procedure

1. Go to the parameter setting screen through "System Settings" > "Grid-connected Control" > "Capacity Management".
2. Set the capacity management mode according to actual requirements.

- Capacity Management: Set the maximum total power value of the transformer to ensure it does not exceed the transformer's charge/discharge capacity.
- Sub-capacity Management: Select different grid-connected points according to the transformer, and set the Maximum Power value under that transformer.

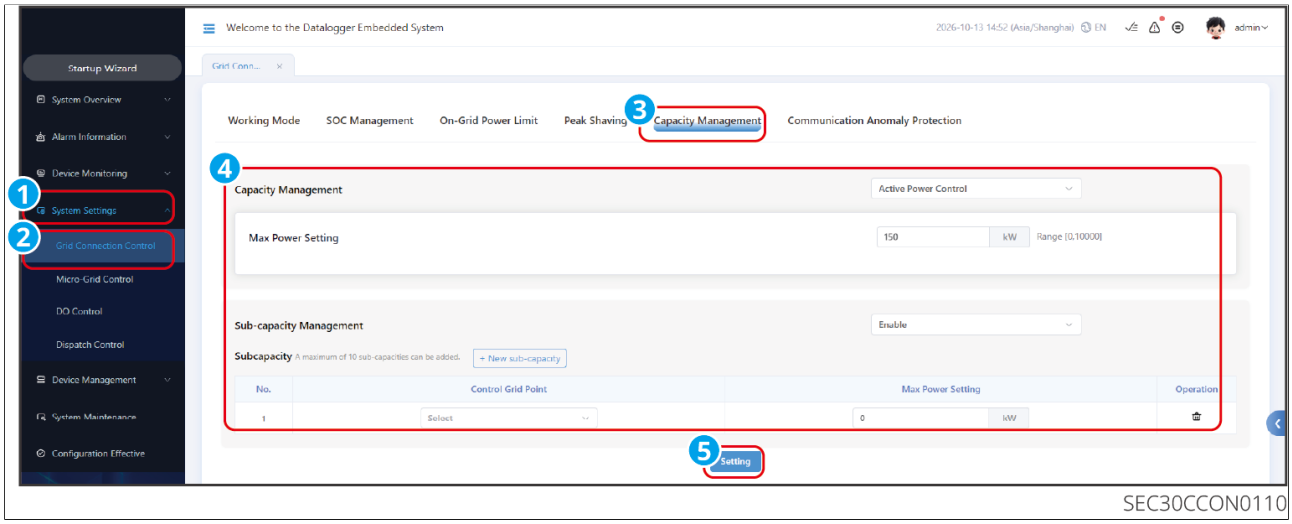

SEC30CCON0110

7.6.1.6 Set Protection Parameters for Communication Abnormality

When a communication abnormality occurs between SEC3000C and the grid-connected inverter, ESS, or meter, and the abnormality duration reaches the "Communication Abnormality Timeout Time", the inverter, ESS, and meter execute the corresponding abnormality handling strategy according to the settings, such as limiting power or disconnecting from the grid.

Procedure

1. Go to the parameter setting screen through "System Settings" > "Grid-connected Control" > "Communication Abnormality Configuration".
2. Set the handling method for communication abnormalities according to actual requirements.
   - Power Limit: The device continues to operate at a percentage of Rated Power.
   - The device disconnects from the grid.
   - Local Automatic Control: Applicable only to the data logger. After the data logger is disconnected from the cloud, it switches to local EMS Mode.

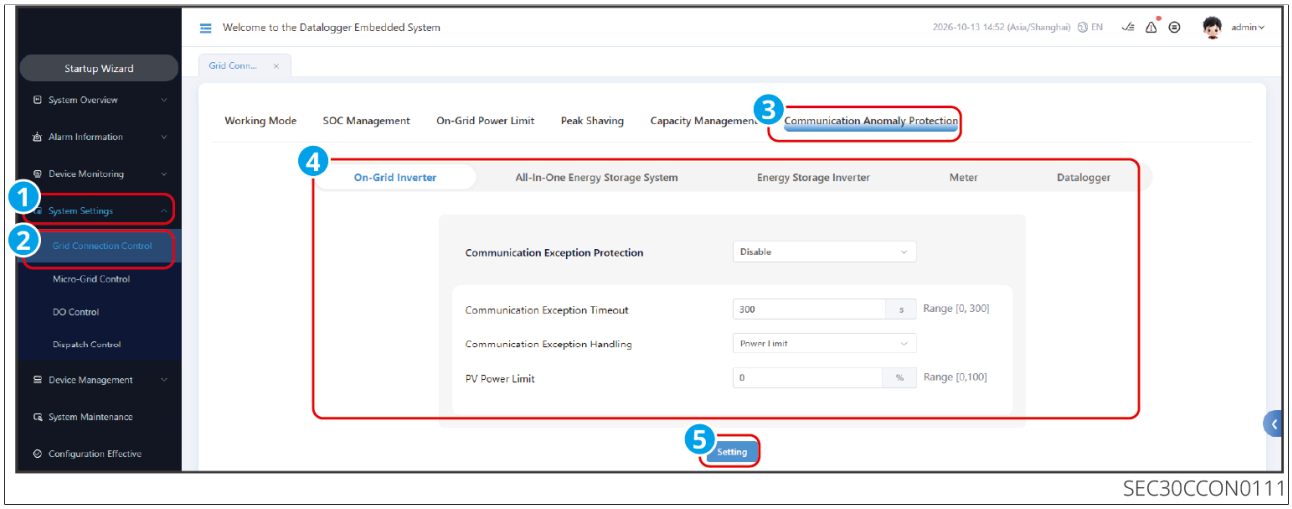

SEC30CCON0111

7.6.2 Set Micro-Grid Control Parameters

Set Microgrid Scenario

Select the Microgrid Scenario according to the actual system conditions. Supported: On/Off-grid scenario and off-grid scenario.

- Microgrid Scenario:
  - On/Off-grid scenario: The system automatically switches between grid-connected and off-grid scenarios.
  - Off-grid scenario: The system is not connected to the grid and operates using PV, diesel generator, battery, and other power sources.
- Off-grid SOC upper limit: Set the battery Charging SOC upper limit during off-grid operation. Default: 90%.
- Off-grid SOC lower limit: Set the battery discharging SOC lower limit during off-grid operation. Default: 10%.
- Control mode: Select according to the actual devices connected to the microgrid system
  - STS mode: seamless On/Off-grid transfer scenario with an STS transfer cabinet
  - Synchronization relay protection mode: break-transfer On/Off-grid switching scenario with a synchronizer and ACB breaker
  - IO mode: On/Off-grid transfer scenario with ACB breaker start/stop control
- ATS feedback port: Select the DI port connected to the ATS to obtain the ATS transfer status on the diesel generator side or the grid side.

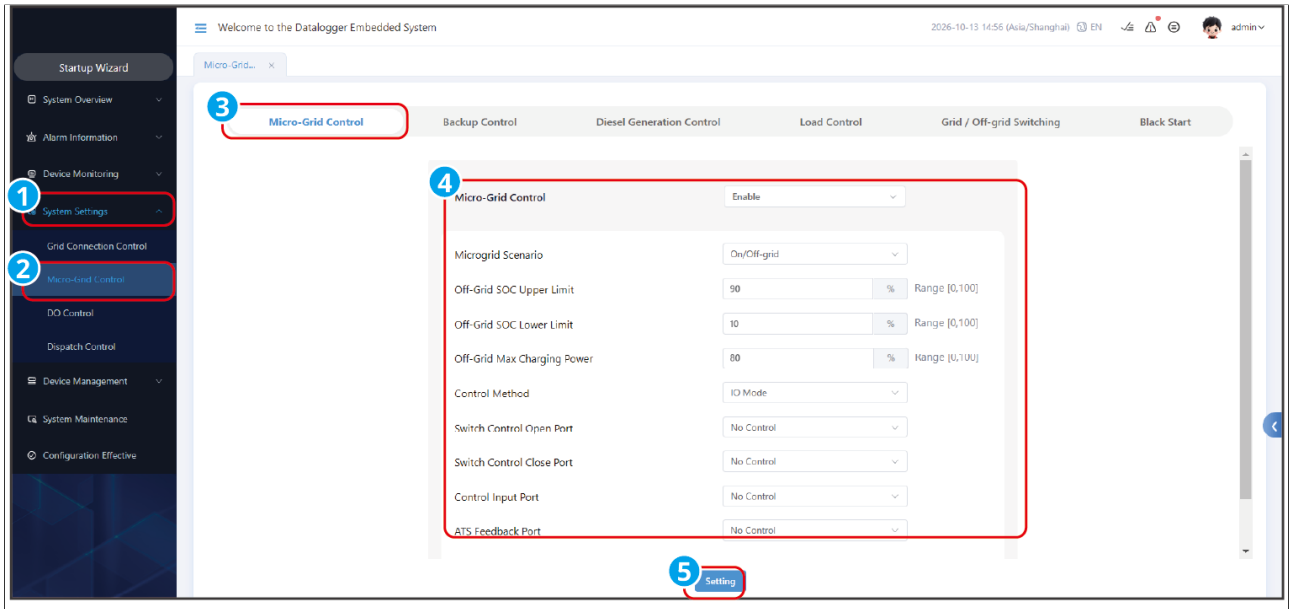

SEC30CCON0112

Set backup power parameters

To ensure that the battery has sufficient energy to discharge for the load when the system switches to off-grid operation, reserve "Backup SOC" during grid-connected operation.

If Battery SOC Low occurs, that is, the battery SOC is below the 'Backup SOC', the battery will be recharged from PV or the grid to the backup SOC value. The default backup SOC value is 30%.

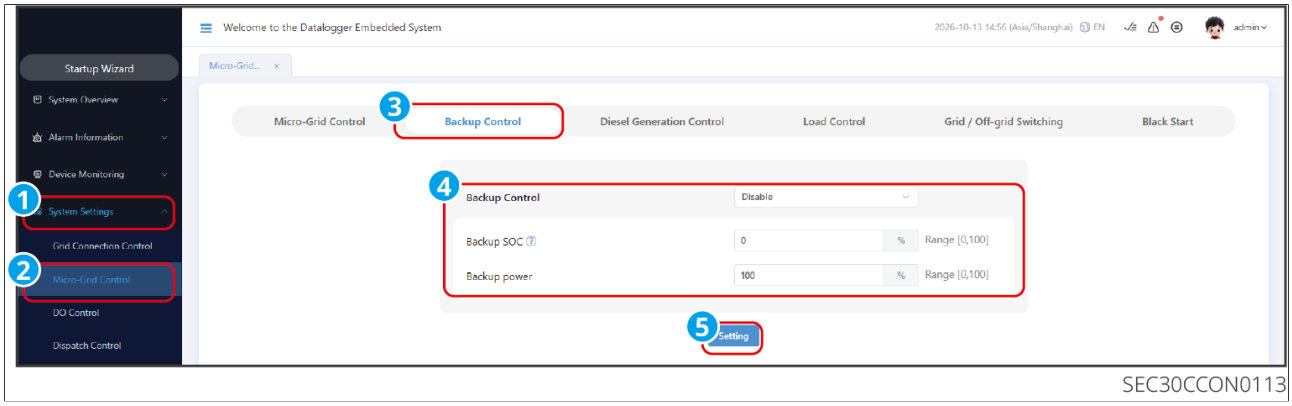

SEC30CCON0113

Set Diesel Generation Control parameters

If a diesel generator is connected to the system, set automatic or manual start/stop of the diesel generator according to actual requirements. When STS125K is used in the system, this screen is not available; refer to7.5.1.6.Set Generator Parameters(Page 104)section to set the diesel generator parameters.

- Enable automatic diesel generator control. When the PV and energy storage energy of the system is insufficient, automatically start the diesel generator to supply power.
- If automatic control is not enabled, manually start and stop the diesel generator.
- Different devices have different ports for connecting to the diesel generator. Select the appropriate wiring mode based on the actual connection.
  - Wiring mode: When the diesel generator is connected to the Grid port of the STS, select the grid side; when it is connected via the Smart port, select the Smart port,
  - Diesel Generation Control method: When the diesel generator is connected via a DO signal cable, select 'DO Control'; when it is connected to the diesel generator controller via communication, select 'Communication Control'.

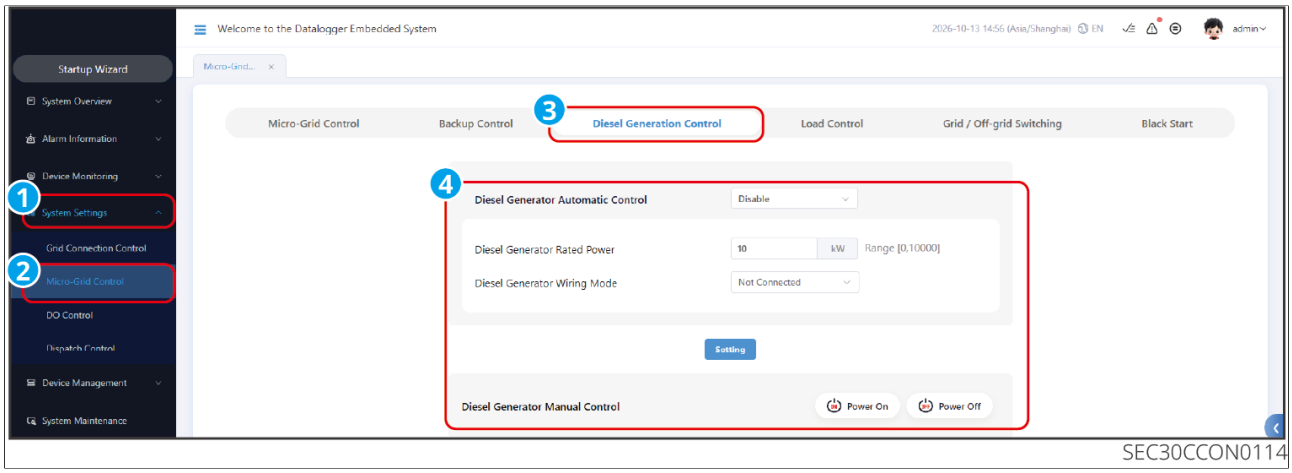

SEC30CCON0114

Set load control parameters

If different loads are connected to the system, select the load type connected to each port according to actual conditions, and set the loads to start/stop automatically or manually.

- If load automatic control is selected, when the battery SOC in the system is ≥ the switch-on SOC, the port switch will close and start the device connected to the corresponding port; when the SOC is < the switch-off SOC, the port switch will open and shut down the device connected to the corresponding port.
- If load manual control is selected, manually turn on or off the device connected to the corresponding port.
- If manual control of the load switch is required, confirm that a load is connected to the port.

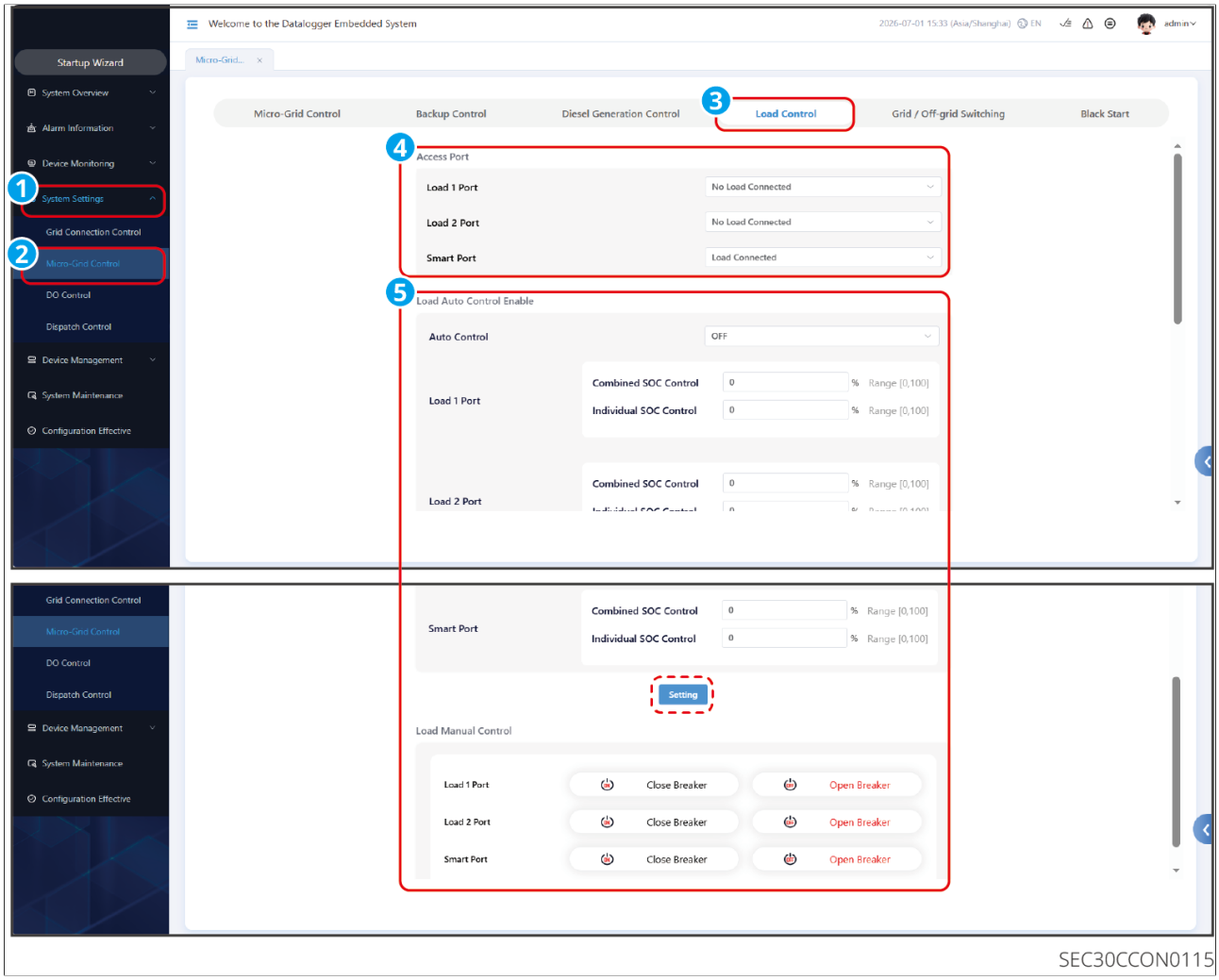

SEC30CCON0115

Set On/Off-grid switching parameters

In a microgrid system, the On/Off-grid state can be switched automatically. If manual control is required, set the 'Manual On/Off-grid Switching' parameter.

- Switch On-Grid to Off-Grid: Manually switch the system from on-grid operation to off-grid operation and maintain the off-grid state.
- Switch Off-Grid to On-Grid: Manually switch the system to on-grid operation. If the grid status is normal, maintain on-grid operation; if the grid status is abnormal, automatically connect to the grid after the grid recovers.

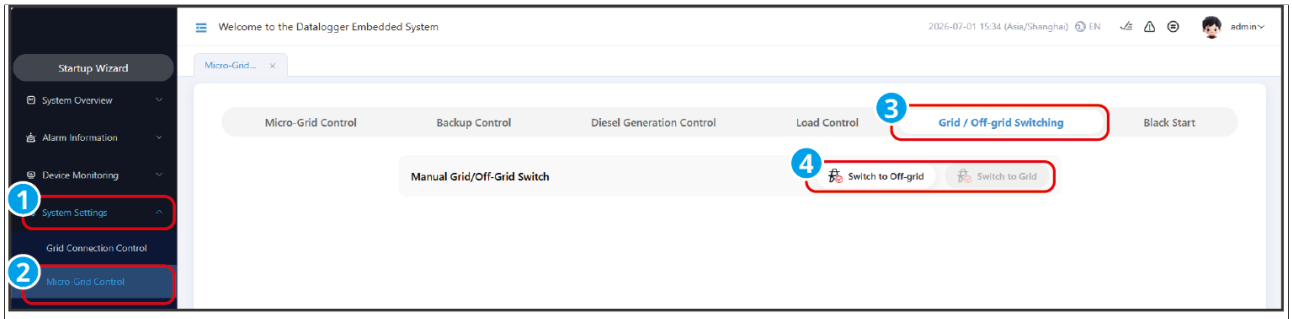

SEC30CCON0116

Black Start Control

If the system is in the off-grid shutdown state, the Manual Black Start function can be used to start the system and make it operate off-grid.

If the system is in standby state, when the PV power generation reaches the 'Minimum Predicted Power for Black Start', black start can be automatically enabled to start the system.

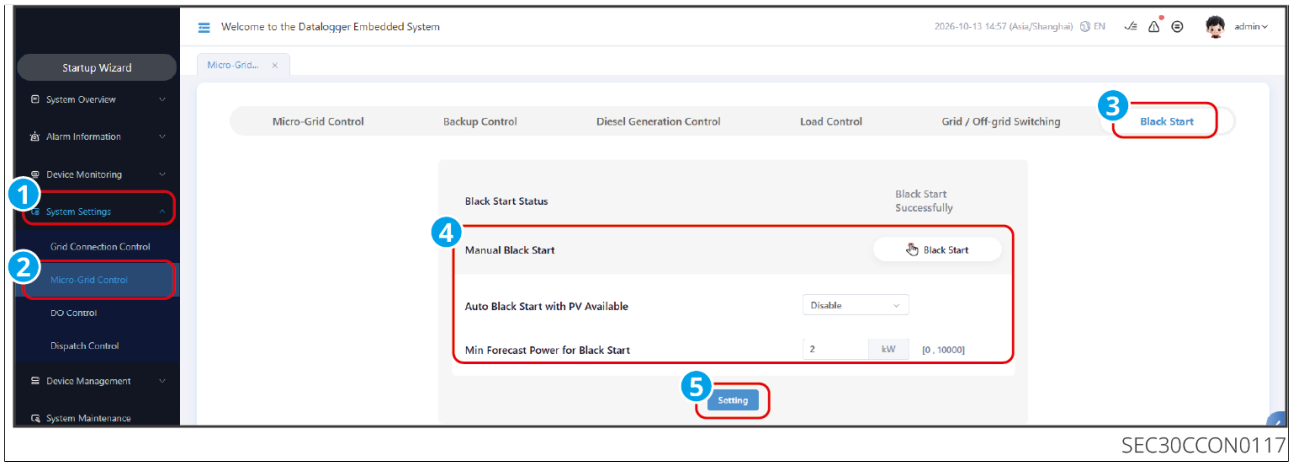

SEC30CCON0117

7.6.3 Set DO Control Parameters

7.6.3.1 Set RCR Parameters

- According to the standards of Germany and other regions, the control box must provideRCR (Ripple Control Receiver) signal control ports to meet grid dispatch requirements.
- To implement functions such asRCRfunction, connect theRCRdevice to the built-in data acquisition unit of the control box at theDI1/DI2/DI3/DI4/REF1ports to implement active power derating, or connect to theDI1/DI2/DI3/DI4/REF2ports to implement reactive power dispatch.

Procedure

1. Go to "System Settings">"DO Control">“RCR " to enter the parameter setting screen.
2. Set theRCRparameters.

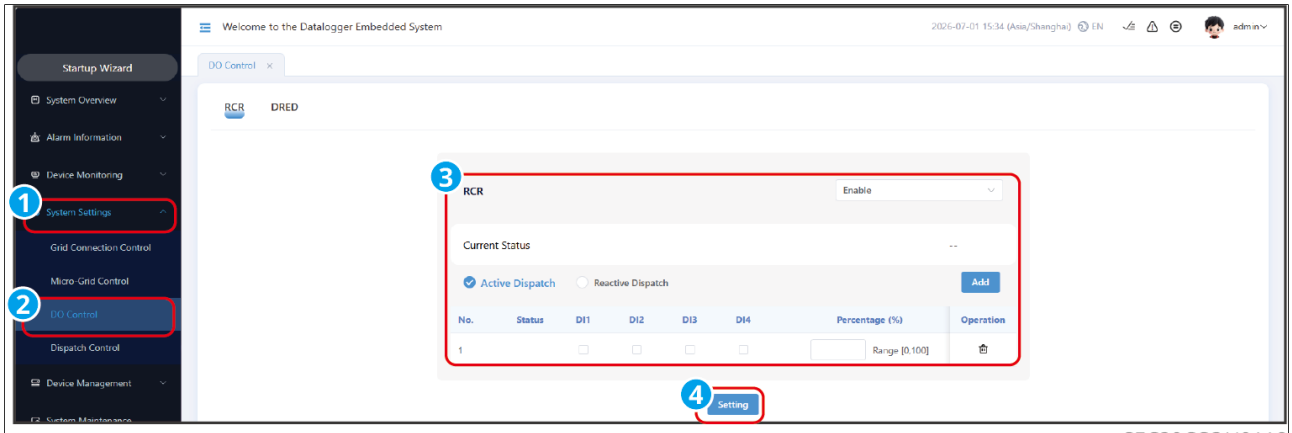

SEC30CCON0118

No.	Parameter Name	Description
1	Start Control	Enable or disable theRCRfunction.
2	Current Status	• Display the currentRCRfunction operating status. For example:RCR1(100)indicates that the operating status isRCR1, and the feed-in power is100%。 • nRCRindicates that the operating status is not in effect.

No.	Parameter Name	Description
3	Active Dispatch	• According to the grid company's requirements and theRCRfixture type, select one or moreDIports and set the corresponding percentage. The percentage refers to the system output power as a percentage of Rated Power. • Supports configuration of16percentage levels; set them according to the actual requirements of the grid company. • Do not configure duplicate state combinations forDI1-DI4; otherwise, the function cannot operate normally. • If the actual wiring of the connectedDIports does not match thewebconfiguration, the operating status will not take effect.
4	Reactive Dispatch	• According to the grid company's requirements and theRCRfixture type, select one or moreDIports and set the correspondingPFvalues. • Supports configuration of16levels of Power Factor configuration. Set it according to the actual requirements of the grid company. • PFvalue range requirements: [-100，-80] or [80,100】，【-100，-80] Corresponding Power Factor lagging [-0.99，-0.8】，【80,100] Corresponding Power Factor leading [0.8,1】。 • Do not configure duplicate state combinations forDI1-DI4; otherwise, the function cannot operate normally. • If the actual wiring of the connectedDIports does not match thewebconfiguration, the operating status will not take effect.

7.6.3.2 Set DRED Parameters

- According to the standard requirements of Australia and other regions, the inverter must meet DRM (DEMAND RESPONSE MODES) Certification.
- To implement the DRM function, connect the DRED (Demand Response Enabling

Device) to the DI1/DI2/DI3/DI4/REF1/REF2 ports of the built-in data logger.

Procedure

1. Go to "System Settings">"DO Control">“DRED " to enter the parameter setting screen.
2. Set the DRED parameters according to actual requirements.



SEC30CCON0119

7.6.4 Set Dispatch Control Parameters

7.6.4.1 Set Reactive Power Control Parameters

- When the distribution transformer area needs to maximize benefits by adjusting the Power Factor, the power data at the grid-connected point collected by the electricity meter can be collected, and based on
  the setpoint, adjust the reactive power output of the energy storage system to optimize the grid gateway Power Factor.
- Only applicable to scenarios where a single meter is used in the system.

Procedure

1. Go to 'System Settings' > 'Dispatch Control' > 'Reactive Power Control' to enter the parameter setting screen.
2. Set the reactive power control parameters according to actual requirements.

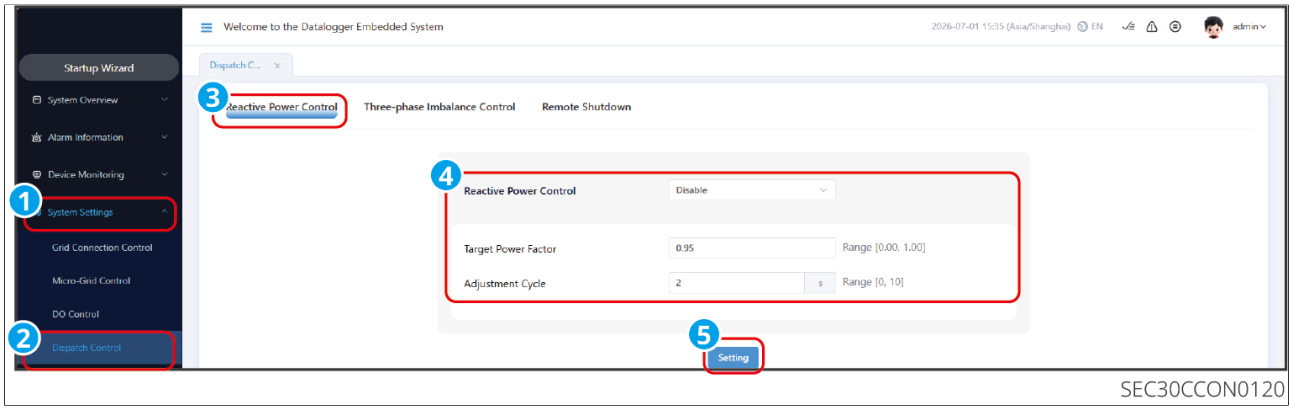

SEC30CCON0120

No.	Parameter Name	Description
1	Target Power Factor	Set the target Power Factor value according to actual requirements.
2	Regulation period	Set the period for detecting the Power Factor value. Generally set to 5 seconds.

7.6.4.2 Set Three-Phase Imbalance Control

In the case of three-phase load imbalance, enabling the three-phase imbalance function can dynamically adjust three-phase power to balance the three-phase power.

Procedure

1. Refer to7.5.1.5.Set Advanced Parameters for Energy Storage Inverter(Page 101), and enable 'Three-phase Unbalanced Output'.
2. Go to 'System Settings' > 'Dispatch Control' > 'Three-phase Imbalance Control' to enter the parameter setting screen.
3. Enable or disable the function according to actual requirements.

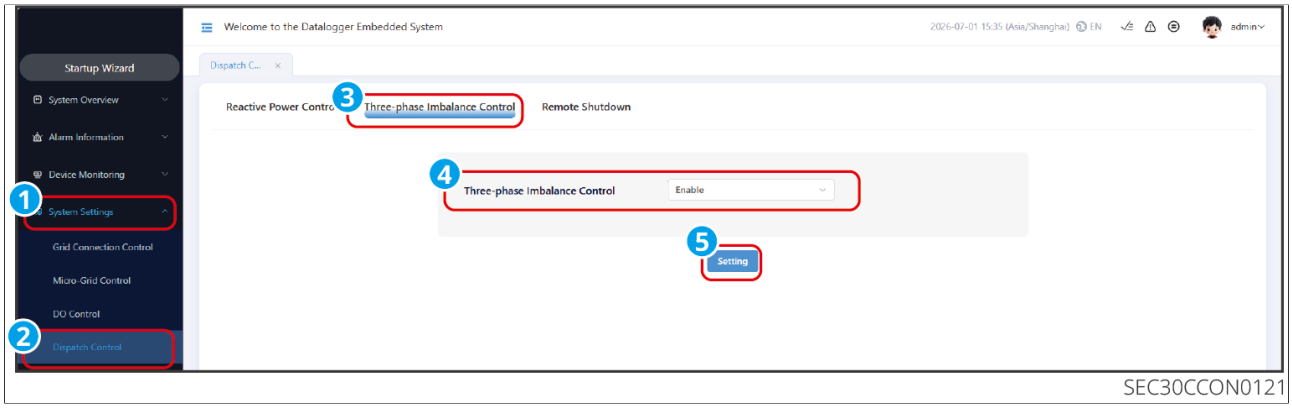

SEC30CCON0121

7.6.4.3 Set Remote Shutdown

According to the requirements of some countries or regions, if the remote shutdown function needs to be implemented, connect the Protection device to the AI1+ or AI2+ port and the 12V power output port of the control box.
When applying the NS Protection Function for the German region, short-circuit the NS Protection Function port on the inverter side; otherwise, this function will not take effect.

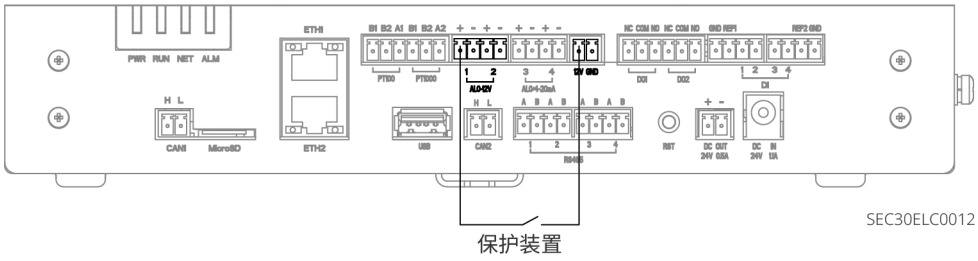

SEC30ELC0012

Procedure

1. Go to 'System Settings' > 'Dispatch Control' > 'Remote Shutdown' to enter the parameter setting screen.
2. Set the remote shutdown access port and port status according to actual requirements.

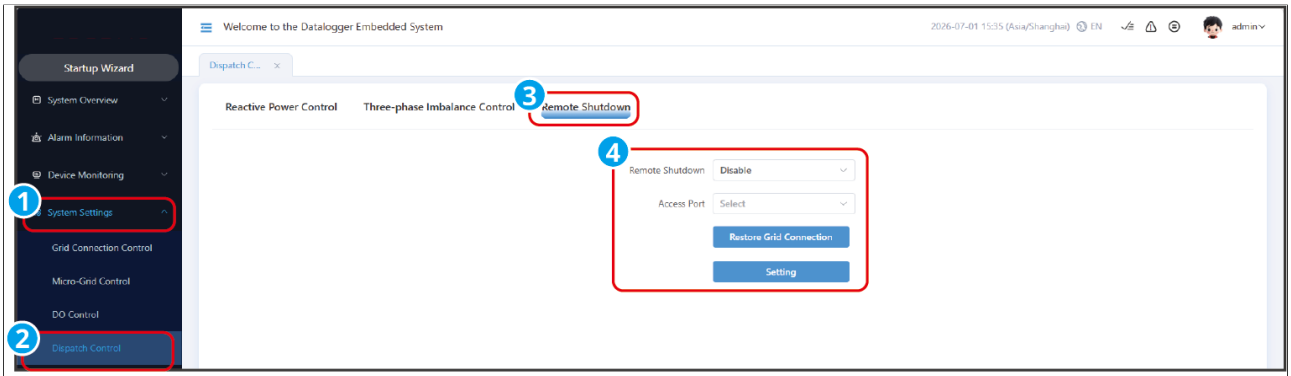

SEC30CCON0122

No.	Parameter Name	Description
1	Function Switch	Enable or disable the remote shutdown function.
2	Connection Port	Set according to the port actually connected to the control box. Supported: AI1 or AI2.
3	Restore Grid Connection	After the inverter is shut down, if you need to start it and restore the grid-connected state, click the Restore Grid Connection button.

7.6.4.4 Set SOC Calibration Function

Applicable to ESA261 Series energy storage cabinets.
Manually trigger the SOC calibration function to perform a complete full charge.
Periodic SOC calibration helps maintain cell SOC balance.
A timeout can be set for the calibration process. If calibration is not completed within the threshold, calibration failure will be indicated, and the user can restart the calibration process.

Procedure

1. Go to System Settings > Dispatch Control > SOC Calibration to enter the settings screen.
2. Click Start to perform SOC calibration.



SEC30CCON0143

8 System Maintenance

8.1 Power off the System

DANGER

- When operating or maintaining equipment in the system, power off the system first. Operating equipment while energized may cause equipment damage or electric shock hazards.
- After the equipment is powered off, internal components take some time to discharge. Wait until the equipment is fully discharged according to the time requirement on the label.

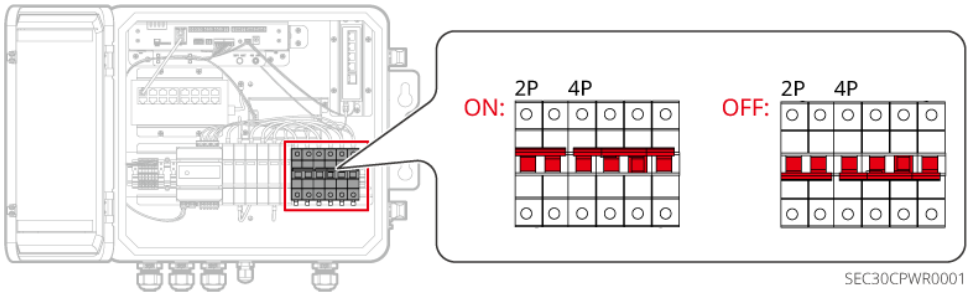

8.2 Equipment Removal

DANGER

- Ensure that the equipment is powered off.
- Wear personal protective equipment when operating the equipment.

Step1: Disconnect all electrical connections of the equipment, including power cables and communication cables
Step2: Remove the equipment.
Step3: Store the equipment properly. If it will be put into use later, ensure that the storage conditions meet the requirements.

8.3 Equipment Disposal

When the equipment can no longer be used and needs to be scrapped, dispose of it in accordance with the electrical waste disposal requirements of the laws and regulations in the country/region where the equipment is located. Do not dispose of the equipment as household waste.

8.4 Periodic Maintenance

WARNING

- If any problem is found that may affect the battery or energy storage inverter system, contact after-sales personnel. Do not disassemble the equipment without authorization.
- If exposed copper wires inside the conductive cable are found, do not touch them. High voltage hazard. Contact after-sales personnel. Do not disassemble the equipment without authorization.
- If other emergencies occur, contact after-sales personnel immediately, operate under the guidance of after-sales personnel, or wait for on-site operation by after-sales personnel.

Maintenance Content	Maintenance Method	Maintenance Interval	Maintenance Purpose
System Cleaning	1. Check whether the air inlet/air outlet has foreign objects or dust. 2. Check whether the installation space meets the requirements, and check whether debris is accumulated around the equipment.	1time/half year	Prevent heat dissipation failures.
System Installation	1. Check whether the equipment is installed securely and whether the fastening screws are loose. 2. Check whether the equipment appearance is damaged or deformed.	1time/half year~1time/year	Confirm the equipment installation is secure and stable.
Electrical connection	Check electrical connections for looseness, cable sheath damage, or exposed copper.	1time/half year~1time/year	Verify the reliability of electrical connections.

Maintenance Content	Maintenance Method	Maintenance Interval	Maintenance Purpose
Sealing performance	Check whether the sealing of the equipment cable entry holes meets requirements. If gaps are too large or the holes are not sealed, reseal them.	1time/year	Verify the equipment is sealed and the waterproofing performance is intact.

8.5 System Maintenance (WEB)

8.5.1 Upgrade the Equipment

Supports upgrading the firmware versions of devices such as data loggers, inverters, integrated energy storage cabinets, and STS via the web.

NOTICE
During the upgrade, ensure the equipment remains powered on. Power loss to the equipment may cause the upgrade to fail.

Online upgrade procedure

It is recommended to use this function when network conditions are good.

1. Select the target device and click 'Detect' to check for upgradable versions.
2. Click 'Upgrade' to perform the online upgrade.



SEC30CCON0144

USB flash drive upgrade procedure (only applicable to data logger upgrade)

NOTICE
• Before upgrading, confirm that only the currently required upgrade package is stored on the USB flash drive. If there are multiple upgrade packages, the system reads the first upgrade package by default, which may cause the upgrade to fail. • During the upgrade, do not insert or remove the USB flash drive; otherwise, equipment abnormalities may occur.

1. Contact after-sales service to obtain the equipment upgrade package, and prepare aFAT32-formattedUflash drive,Uflash drive capacity shall not exceed32G。
2. In the root directory of theUflash drive, create a new folder namedcollector, and store the equipment upgrade package in thecollectorfolder.
3. Insert theUflash drive into the data loggerUSBport. After the data logger detects the equipment upgrade package and starts the upgrade, the fault indicator changes to rapid flashing. If the fault indicator does not change to rapid flashing, the upgrade has not started. Check the upgrade package andUflash drive status.
4. After the upgrade is complete, the data logger automatically restarts. Remove theUflash drive; otherwise, repeated upgrades may occur.

Viawebupgrade procedure

1. Contact after-sales service to obtain the equipment upgrade package.
2. Save the equipment upgrade package locally on the computer, and upgrade the equipment according to the following operation prompts. The upgrade steps for inverters, integrated energy storage cabinets, and STS are the same; here, only the inverter illustration is used as an example.

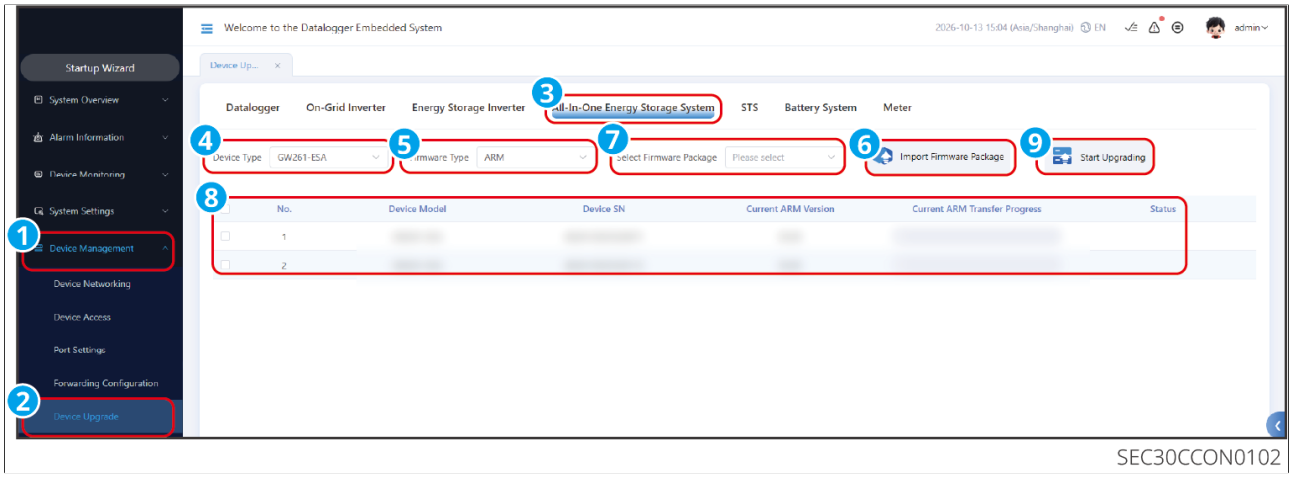

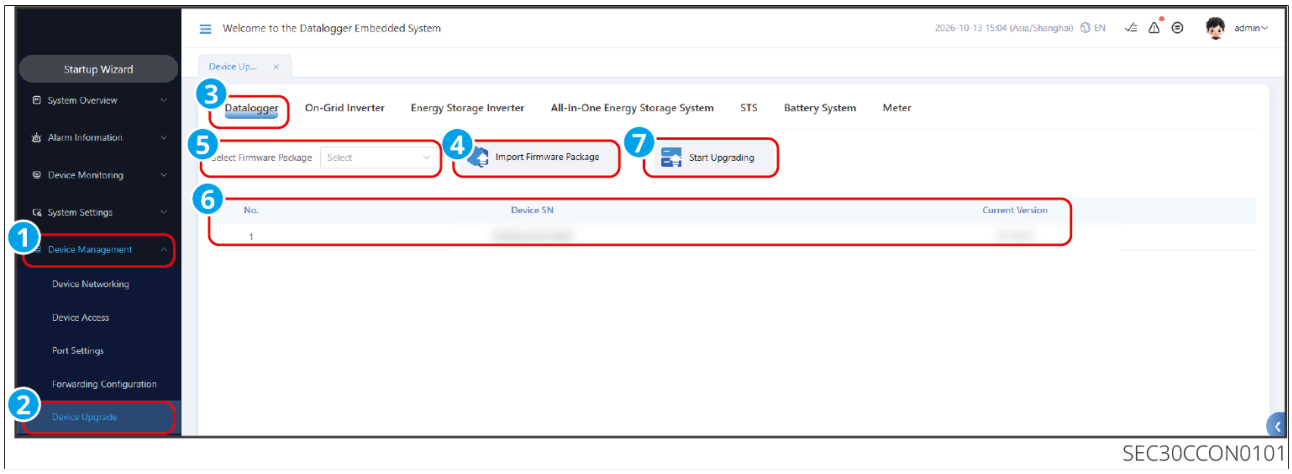

8.5.2 Maintain the System

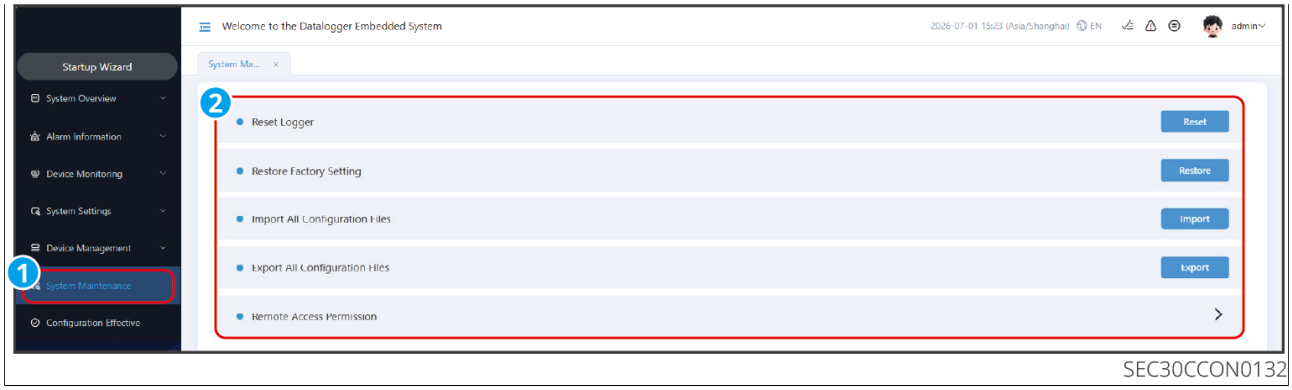

Parameter Name	Description
Restart Data Logger	Execute a system reset; the built-in data logger in the control box will automatically power off and restart.
Restore Factory Settings	• Restore factory settings: clears device access information, forwarding configuration, login password, and other information. • Restore communication configuration (optional): restores the network card configuration. • Restore data logger data (optional): clears logs, historical alarms, historical data, and other information.
Import Full Configuration File	Before replacing the control box or built-in data logger, export the data logger configuration file to your local device.
Export Full Configuration File	After replacing the control box or built-in data logger, import the configuration file exported locally to the new control box or built-in data logger. After successful import, the data logger restarts and the configuration file takes effect. Confirm that the device parameters are correctly configured.
Remote Access Permission	After enabled, redirection to the embedded web via SEMS+ web is supported.

8.5.3 Set System Time

NOTICE
Modifying the date and time affects the integrity of the system Energy Generation and performance data records. Do not change the time zone or system time arbitrarily.

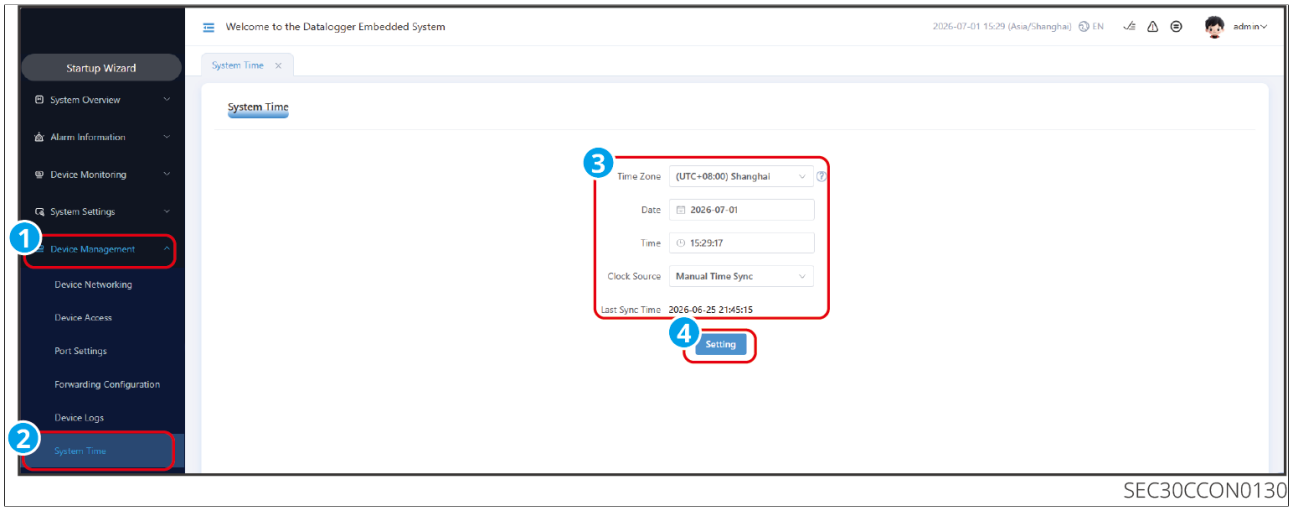

SEC30CCON0130

No.	Parameter Name	Description
1	Time Zone	Manual modification is available only when the clock source is set to manual time synchronization.
2	Date	
3	Time	
4	Clock Source	• Set the clock source. Supported:NTP、Modbus-TCP, manual time synchronization, and GoodWe cloud platform time synchronization. • WhenSEC3000C+GW125/261-ESA-LCN-G10is used in China, set it toNTPas the clock source.

8.5.4 Change Login Password

Operating steps:

1. Via "Data Logger Configuration" >"Security Settings" to enter the password modification screen.
2. Click "Password Modification", enter the old and new passwords as required, and click "Save".

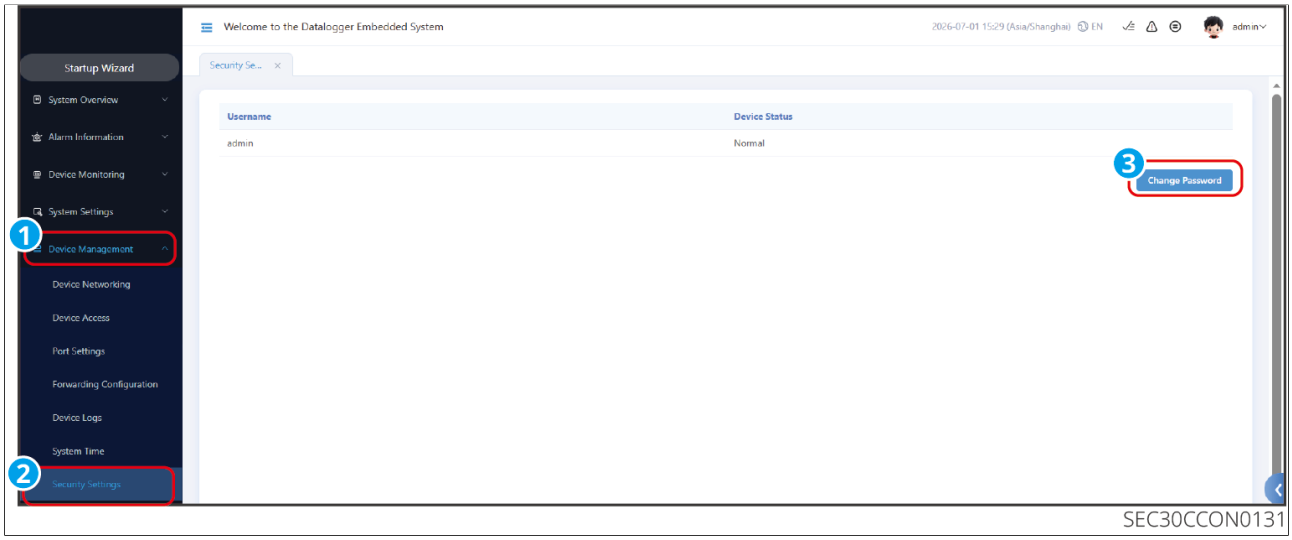

SEC30CCON0131

8.6 Troubleshooting

Perform troubleshooting according to the following methods. If the troubleshooting methods do not help you, please contact the after-sales service center.
When contacting the after-sales service center, please collect the following information to facilitate rapid problem resolution.

1. Product information, such as serial number, software version, device installation time, fault occurrence time, fault frequency, etc.
2. Device installation environment, such as weather conditions, whether the modules are blocked or shaded, etc. For the installation environment, it is recommended to provide photos, videos, and other files to assist in problem analysis.
3. Grid conditions.

No.	Fault	Solutions
1	The data logger indicator does not light up after power-on.	1. Confirm whetherSEC3000Chas voltage at its built-in single-phase circuit breaker. Voltage Range:100Vac-240Vac。 2. Is the single-phase circuit breaker open?

No.	Fault	Solutions
2	The meter indicator does not light up after power-on	1. Three-phase four-wire scenario: Confirm whether theSEC3000Cinternal three-phase circuit breaker has voltage; line Voltage Range:156Vac-480Vac。 2. Three-phase three-wire scenario: Check theSEC3000Cinternal three-phase circuit breaker, and confirm whether theL2andNlines are shorted; line Voltage Range:156Vac-480Vac。 3. Is the three-phase circuit breaker open?
3	WEBpage cannot be opened	1. Confirm whether thewebpage is accessed one minute after the device is powered on. 2. Confirm whether the device is correctly connected to thePC。 3. Confirm whetherPC'sIPaddress range setting has been changed to172.18.0.XXXor set to automatic acquisition. 4. Clear the browser page cache.
4	WEBpage shows that the device is offline	1. Confirm whether the energy storage unit is connected via theWiFi/LAN Kit-20Intelligent communication stick to theSEC3000Cinternal switch Ethernet port. 2. Confirm whether the inverter is correctly connected to theSEC3000C'sRS485communication terminals.

No.	Fault	Solutions
5	The meter display data is abnormal	1. Confirm whetherwebmeterCTratio setting is consistent with the actually usedCTratio; 2. Confirm whetherCTwiring is correct; 3. Three-phase four-wire scenario: Confirm whether theSEC3000Cinternal three-phase circuit breaker's connection wiring sequence (N/L1/L2/L3) is correct; 4. Three-phase three-wire scenario: Check theSEC3000Cinternal three-phase circuit breaker, and confirm whether theL2andNlines are shorted, and confirm whether the wiring sequence (/L1/L2/L3) is correct.

9 Technical Specifications

Technical Specifications	SEC3000C
Communication	
Maximum number of supported inverters	RS485: 60，LAN*[1]: 10
RS-485interface	4
Ethernet port	2*RJ45, 10/100Mbps
4G	Optional
Digital/analog input/output	DI×4, DO×2, AI×4
Configuration	
Data Logger	EzLogger3000C*1
Switch	15ports
Intelligent electricity meter	GM330*1
Meter voltage measurement range (Vac)	3L/N/PE: 172~817(line voltage) 3L/PE: 100~472(line voltage)
Meter frequency measurement range (Hz)	50/60
Meter current measurement range (A)	nA:5A（200≤n≤5000)
Auxiliary power supply	100~240V, 50/60Hz
Power consumption (W)	≤25
Mechanical Parameters	
Dimensions (Width × Height × Depth mm)	450*400*242
Weight (kg)	≤16.9
Mounting Method	Wall mounting, bracket mounting, pole mounting
Environmental Parameters	
Operating temperature range(℃)	-30~+60
Storage Temperature Range (℃)	-40~+70
Relative Humidity	0~100%
Max. Operating Altitude (m)	3000
IP rating	IP66
Anti-corrosion Class	C5L

Technical Specifications	SEC3000C
Standards met	
Certification	CE-RED（EN18031）、RCM

*1. Other Certification documents can be provided upon customer request.

10 Appendix

10.1 Custom Safety Parameters

NOTICE
Grid code parameters must be set according to the requirements of the grid company. Any changes require the grid company's approval.

Active Power Mode

P(F) Curve

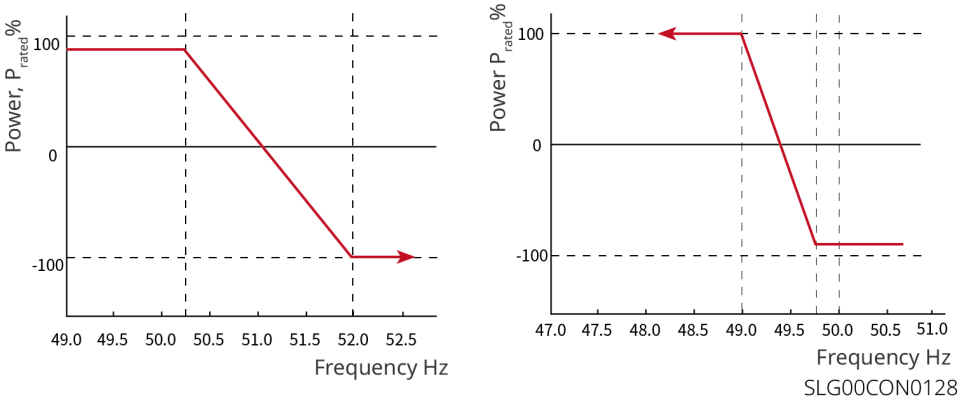

P(U) Curve

Parameter Name	Description
Output Active Power Setting	Set the inverter output power limit.
Power ramp rate	Set the ramp rate for active power output increase or decrease.
Overfrequency Derating	
P(F) Curve	Enable this function when the P(F) curve needs to be set according to the grid code requirements of certain countries or regions.

Parameter Name	Description
Overfrequency Derating mode	Set the overfrequency Derating mode according to actual requirements. • Slope mode: adjust power based on the overfrequency point and Derating slope. • Stop mode: adjust power based on the overfrequency start point and overfrequency end point.
Overfrequency start point	When the grid frequency is too high, the inverter active power output decreases. When the grid frequency is greater than this value, the inverter output power starts to decrease.
Import/Export Energy Transition Frequency	When the set frequency value is reached, the system switches from Export Energy to import energy.
Overfrequency end point	When the grid frequency is too high, the inverter active power output decreases. When the grid frequency is greater than this value, the inverter output power does not continue to decrease.
Overfrequency power slope reference power	Adjust the inverter active power output based on Rated Power, current power, Apparent Power, or maximum active power.
Overfrequency power slope	When the grid frequency is higher than the overfrequency point, the inverter reduces its output power according to the slope.
Silent time	Response delay time for inverter output power change when the grid frequency is higher than the overfrequency point.
Hysteresis function enable	Enable the hysteresis function.
Frequency hysteresis point	During overfrequency Derating, if the frequency decreases, the output power is maintained at the lowest Derating power point until the frequency falls below the hysteresis point, after which the power recovers.

Parameter Name	Description
Hysteresis wait time	For overfrequency Derating, when the frequency decreases and falls below the hysteresis point, this is the waiting time for power recovery; that is, power recovery occurs only after a certain waiting time.
Hysteresis power recovery slope reference power	For overfrequency Derating, when the frequency decreases and falls below the hysteresis point, this is the reference for power recovery; that is, power recovery is performed at the change rate of recovery slope × reference power. Supported: Pn Rated Power, Ps Apparent Power, Pm current power, Pmax Maximum Power, power difference (△P).
Hysteresis power recovery slope	For overfrequency Derating, when the frequency decreases and falls below the hysteresis point, this is the power change slope during power recovery.
Underfrequency loading	
P(F) Curve	Enable this function when the P(F) curve needs to be set according to the grid code requirements of certain countries or regions.
Underfrequency Loading Mode	Set the underfrequency loading mode according to actual requirements. • Slope mode: regulate power based on the underfrequency point and loading slope. • Stop mode: regulate power based on the underfrequency start point and underfrequency end point.
Underfrequency Start Point	When the grid frequency is too low, the inverter output active power increases. When the grid frequency is lower than this value, the inverter output power starts to increase.
Import/Export Energy Transition Frequency	When the set frequency value is reached, the system switches from Export Energy to import energy.

Parameter Name	Description
Underfrequency End Point	When the grid frequency is too low, the inverter output active power increases. When the grid frequency is lower than this value, the inverter output power does not continue to increase.
Overfrequency power slope reference power	Adjust the inverter active power output based on Rated Power, current power, Apparent Power, or maximum active power.
Underfrequency Power Slope	When the grid frequency is too low, the inverter output active power increases. This is the slope at which the inverter output power rises.
Silent time	When the grid frequency is lower than the underfrequency point, this is the delay response time for inverter output power change.
Hysteresis function enable	Enable the hysteresis function.
Frequency hysteresis point	During underfrequency loading, if the frequency increases, output power is maintained at the lowest loading power point until the frequency exceeds the hysteresis point, then power recovery starts.
Hysteresis wait time	For underfrequency loading, when the frequency increases and exceeds the hysteresis point, this is the waiting time for power recovery; that is, power recovery occurs only after a certain waiting time.
Hysteresis Power Recovery Slope Base Power	For underfrequency loading, when the frequency increases and exceeds the hysteresis point, this is the base for power recovery, i.e., power recovery is performed at the change rate of recovery slope × base power. Supported: Pn Rated Power, Ps Apparent Power, Pm Current Power, Pmax Maximum Power, power difference (△P).
Hysteresis power recovery slope	For underfrequency loading, when the frequency increases and exceeds the hysteresis point, this is the power change slope during power recovery.

Parameter Name	Description
P(U) Curve Enable	Enable this function when the P(U) curve needs to be set according to the grid code requirements of certain countries or regions.
Vn Voltage	Ratio of the actual voltage at the Vn point to the Nominal Voltage, n=1, 2, 3, 4. For example, when set to 90, it indicates: V/Vrated%=90%.
Vn Active Power	Ratio of the inverter output active power at the Vn point to the Apparent Power, n=1, 2, 3, 4. For example, when set to 48.5, it indicates: P/Prated%=48.5%.
Output Response Mode	Set the active power output response mode. Supported: • First-order low-pass filtering: within the response time constant, output regulation is implemented according to the first-order low-pass curve. • Slope dispatch: output regulation is implemented according to the configured power change slope.
Power ramp rate	When the output response mode is set to slope dispatch, Active Dispatch is implemented according to the power change gradient.
First-Order Low-Pass Filter Time Parameter	When the output response mode is set to first-order low-pass filtering, this is the time constant for active power changing according to the first-order low-pass filter curve.
Overload Function Switch	When enabled, the maximum active power output is 1.1 times the Rated Power; otherwise, the maximum active power output is equal to the Rated Power.

Reactive Power Mode

Q(U) Curve

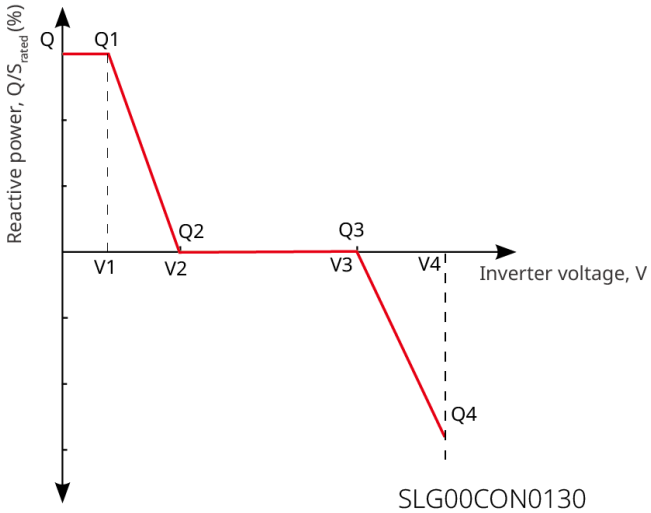

SLG00CON0130

Cosφ Curve

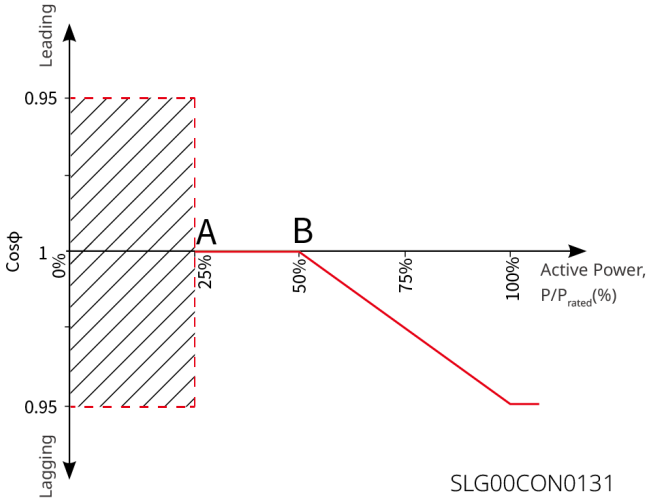

SLG00CON0131

Parameter Name	Description
Fixed PF	
Fixed PF	When a fixed PF value is required according to the grid standards of certain countries or regions, enable this function. After the parameters are set successfully, the Power Factor remains unchanged during inverter operation.
Underexcitation	Set the Power Factor to a positive or negative value according to the grid standard requirements of the country or region and actual usage requirements.
Overexcitation	
Power Factor	Set the Power Factor as required. The range is -1 to -0.8 and +0.8 to +1.

Parameter Name	Description
Fixed Q	
Fixed Q	When Fixed Reactive Power is required according to the grid standards of certain countries or regions, enable this function.
Overexcitation/Underexcitation	According to the grid standard requirements of the country or region and actual usage requirements, set the reactive power to inductive reactive power or capacitive reactive power.
Reactive Power	Set the ratio of Reactive Power to Apparent Power.
Q(U) Curve	
Q(U) Curve	When the Q(U) curve needs to be set according to the grid standards of certain countries or regions, enable this function.
Mode Selection	Set the Q(U) curve mode. Basic mode and slope mode are supported.
Vn Voltage	The ratio of the actual voltage at point Vn to the Nominal Voltage, where n=1, 2, 3, 4.
	For example, when set to 90, it indicates: V/Vrated% = 90%.
Vn Reactive Power	The ratio of the reactive power output by the inverter at point Vn to the Apparent Power, where n=1, 2, 3, 4. For example, when set to 48.5, it indicates: Q/Srated% = 48.5%.
Voltage Deadband Width	Set the voltage deadband when the Q(U) curve mode is set to slope mode. Within the deadband range, no reactive power output is required.
Overexcitation Slope	When the Q(U) curve mode is set to slope mode, set the power change slope to a positive or negative value.
Under-excitation slope	
Vn Reactive Power	The ratio of the reactive power output by the inverter at point Vn to the Apparent Power, where n=1, 2, 3, 4. For example, when set to 48.5, it indicates: Q/Srated% = 48.5%.

Parameter Name	Description
Q(U) curve response time constant	The power shall reach 95% within three response time constants according to a first-order low-pass response.
Extended function enable	Enable the extended function and set the corresponding parameters.
Curve entry power	When the ratio of the inverter output reactive power to the Rated Power is between the curve entry power and the curve exit power, the Q(U) curve requirements are met.
Curve exit power	
cosφ(P) curve	
cosφ(P) curve	Select this function when a Cosφ curve needs to be set according to the grid standard requirements of certain countries or regions.
Mode Selection	Set the cosφ(P) curve mode. Basic mode and slope mode are supported.
N-point power	Percentage of inverter output active power to Rated Power at point N. N=A, B, C, D, E.
N-point cosφ value	N-point Power Factor. N=A, B, C, D, E.
Overexcitation Slope	When the cosφ(P) curve mode is set to slope mode, set the power change slope to a positive or negative value.
Under-excitation slope	
n-point power	Percentage of inverter output active power to Rated Power at point N. N=A, B, C.
n-point cosφ value	N-point Power Factor. N=A, B, C.
cosφ(P) curve response time constant	The power shall reach 95% within three response time constants according to a first-order low-pass response.

Parameter Name	Description
Extended function enable	Enable the extended function and set the corresponding parameters.
Curve entry voltage	When the grid voltage is between the curve entry voltage and the curve exit voltage, the voltage meets the Cosφ curve requirements.
Curve exit voltage	
Q(P) curve	
Q(P) curve enable	Enable this function when the Q(P) curve needs to be set according to the grid standard requirements of certain countries or regions.
Mode Selection	Set the Q(P) curve mode. Basic mode and slope mode are supported.
Pn-point power	Ratio of reactive power at point Pn to Rated Power, n=1, 2, 3, 4, 5, 6. For example, when set to 90, it indicates: Q/Prated%=90%.
Reactive power at Pn point	Ratio of active power at Pn point to Rated Power, n=1, 2, 3, 4, 5, 6. For example, when set to 90, it indicates: P/Prated%=90%.
Overexcitation Slope	When the Q(P) curve mode is set to slope mode, set the power change slope to a positive or negative value.
Under-excitation slope	
Pn-point power	Ratio of reactive power at Pn point to Rated Power, n=1, 2, 3. For example, when set to 90, it indicates: Q/Prated%=90%.
Reactive power at Pn point	Ratio of active power at Pn point to Rated Power, n=1, 2, 3. For example, when set to 90, it indicates: P/Prated%=90%.
Response time constant	The power shall reach 95% within three response time constants according to a first-order low-pass response.

Grid Protection Parameters

Parameter Name	Description
Overvoltage Trigger n-Level Value	Set the n-stage Protection point for grid overvoltage trigger, n=1, 2, 3, 4.
Overvoltage Trigger n-Level Trip Time	Set the n-stage trip time for grid overvoltage trigger, n=1, 2, 3, 4.
Undervoltage Trigger n-Level Value	Set the n-stage Protection point for grid undervoltage trigger, n=1, 2, 3, 4.
Undervoltage Trigger n-Level Trip Time	Set the n-stage trip time for grid undervoltage trigger, n=1, 2, 3, 4.
10min Over-voltage Trigger Value	Set the 10min Over-voltage Trigger Value.
10min Over-voltage Trip Time	Set the trip time for the 10min Over-voltage Trip.
Overfrequency trigger stage-n value	Set the n-stage Protection point for grid overfrequency trigger, n=1, 2, 3, 4.
Overfrequency trigger stage-n trip time	Set the n-stage trip time for grid overfrequency trigger, n=1, 2, 3, 4.
Underfrequency trigger stage-n value	Set the n-stage Protection point for grid underfrequency trigger, n=1, 2, 3, 4.
Underfrequency trigger stage-n trip time	Set the n-stage trip time for grid underfrequency trigger, n=1, 2, 3, 4.

Grid Connection Parameters

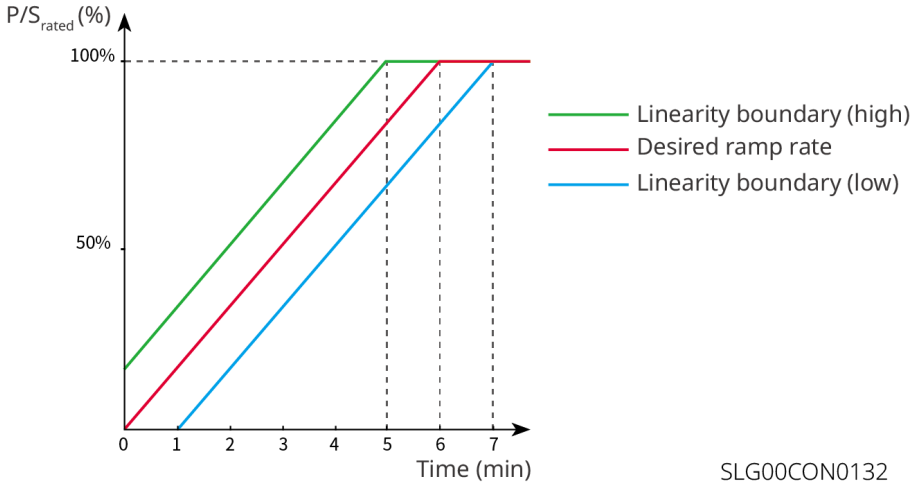

SLG00CON0132

Parameter Name	Description
Startup On-Grid	
Connection Voltage Upper Limit	When the inverter connects to the grid for the first time, if the grid voltage is higher than this value, the inverter will not be able to connect to the grid.
Connection Voltage Lower Limit	When the inverter connects to the grid for the first time, if the grid voltage is lower than this value, the inverter will not be able to connect to the grid.
Connection Frequency Upper Limit	When the inverter connects to the grid for the first time, if the grid frequency is higher than this value, the inverter will not be able to connect to the grid.
Connection Frequency Lower Limit	When the inverter connects to the grid for the first time, if the grid frequency is lower than this value, the inverter will not be able to connect to the grid.
Grid Connection Waiting Time	When the inverter is connected to the grid for the first time, the waiting time for grid connection after the grid voltage and frequency meet the grid-connection requirements.
Soft Ramp Up Slope Enable	Enable the startup ramp function.
Soft Ramp Up Slope	According to the standards of certain countries or regions, the percentage increase in output power per minute during the inverter's initial startup.

Parameter Name	Description
Fault Reconnection	
Connection Voltage Upper Limit	When the inverter reconnects to the grid after a fault, if the grid voltage is higher than this value, the inverter will not be able to connect to the grid.
Connection Voltage Lower Limit	When the inverter reconnects to the grid after a fault, if the grid voltage is lower than this value, the inverter will not be able to connect to the grid.
Connection Frequency Upper Limit	When the inverter reconnects to the grid after a fault, if the grid frequency is higher than this value, the inverter will not be able to connect to the grid.
Connection Frequency Lower Limit	When the inverter reconnects to the grid after a fault, if the grid frequency is lower than this value, the inverter will not be able to connect to the grid.
Grid Connection Waiting Time	When the inverter reconnects to the grid after a fault, the waiting time for grid connection after the grid voltage and frequency meet the grid-connection requirements.
Reconnection Ramp-Up Slope Enable	Enable the startup ramp function.
Reconnection Ramp-Up Slope	According to the standards of certain countries or regions, the percentage increase in output power per minute during non-initial grid connection of the inverter. For example, if set to 10, the reconnection ramp-up slope is 10%P/Srated/min.

Voltage Fault Ride-Through Parameters

Parameter Name	Description
Low Voltage Ride-Through	
UVn Point Voltage	During low voltage ride-through, the ratio of the ride-through voltage at the LVRT characteristic point to the Nominal Voltage. n=1, 2, 3, 4, 5, 6, 7.

Parameter Name	Description
UVn Point Time	During low voltage ride-through, the ride-through time at the LVRT characteristic point. n=1, 2, 3, 4, 5, 6, 7.
LVRT Entry Threshold	When the grid voltage is between the LVRT entry threshold and the LVRT exit threshold, the inverter will not immediately undergo a Grid Power Outage.
LVRT Exit Threshold	
Slope K1	During low voltage ride-through, the K-value coefficient for reactive power support.
Zero Current Mode Enable	When enabled, the system outputs zero current during low voltage ride-through.
Entry Threshold	Threshold for entering Zero Current Mode.
High Voltage Ride-Through	
OVn point voltage	During high voltage ride-through, the ratio of the ride-through voltage at the high voltage ride-through characteristic point to the Nominal Voltage. n=1, 2, 3, 4, 5, 6, 7.
OVn point time	During high voltage ride-through, the ride-through time at the high voltage ride-through characteristic point. n=1, 2, 3, 4, 5, 6, 7.
HVRT entry threshold	When the grid voltage is between the HVRT entry threshold and the HVRT exit threshold, the inverter does not immediately disconnect from the grid (Grid Power Outage).
HVRT exit threshold	
Slope K2	K-value coefficient for reactive power support during high voltage ride-through.
Zero Current Mode Enable	During high voltage ride-through, the system outputs zero current.
Entry Threshold	Threshold for entering Zero Current Mode.

Frequency fault ride-through parameters

Parameter Name	Description
Frequency ride-through enable	Enable the frequency ride-through function.
UFn point frequency	Set the frequency at under-frequency point n. n=1, 2, 3.
UFn point time	Set the under-frequency time at under-frequency point n. n=1, 2, 3.
OFn point frequency	Set the frequency at over-frequency point n. n=1, 2, 3.
OFn point time	Set the over-frequency time at over-frequency point n. n=1, 2, 3.

10.2 Terminology

Overvoltage Category Description

Overvoltage Category I: Equipment connected to circuits in which measures are taken to limit transient Overvoltage to a sufficiently low level.
Overvoltage Category II: Energy-consuming equipment supplied from a fixed installation. Such equipment includes appliances, portable tools, and other household and similar loads. If special requirements are imposed on the reliability and suitability of such equipment, Overvoltage Category III shall be used.
Overvoltage Category III: Equipment in fixed installations where the reliability and suitability of the equipment must meet special requirements. This includes switchgear and controlgear in fixed installations and industrial equipment permanently connected to fixed installations.
Overvoltage Category IV: Equipment used at the supply origin of the installation, including measuring instruments and primary overcurrent Protection devices, etc.

Wet Location Category Description

Environmental Parameters	Level		
	3K3	4K2	4K4H

Environmental Parameters	Level		
Humidity Range	0~+40℃	-33~+40℃	-33~+40℃
Temperature Range	5% to 85%	15% to 100%	4% to 100%

Environmental category definitions
Outdoor inverter: ambient air temperature range -25 to +60°C, suitable for environments with Pollution Degree 3;
Indoor Type II inverter: ambient air temperature range -25 to +40°C, suitable for environments with Pollution Degree 3;
Indoor Type I inverter: ambient air temperature range 0 to +40°C, suitable for environments with Pollution Degree 2;

Pollution Degree category definitions
Pollution Degree 1: No pollution or only dry, non-conductive pollution;
Pollution Degree 2: Normally only non-conductive pollution, but temporary conductive pollution caused by occasional condensation must be considered;
Pollution Degree 3: Conductive pollution, or non-conductive pollution that becomes conductive due to condensation;
Pollution Degree 4: Persistent conductive pollution, such as pollution caused by conductive dust or rain and snow.

10.3 Product Documentation Map

Product	Link
ET40-50kW Series	ET40-50kW Series Inverter Quick Installation Guide
	ET40-50kW Series Inverter User Manual
	ET40-50kW Series Solution User Manual

Product	Link
ESA261kWh Series	ESA261kWh Series Energy Storage Cabinet Quick Installation Guide
	ESA261kWh Series Energy Storage Cabinet User Manual
	ESA261kWh Series Solution User Manual (Grid-connected)
	ESA261kWh Series Solution User Manual (Microgrid)
ETR125kW Series	ETR125kW Series Inverter Quick Installation Guide
	ETR125kW Series Inverter User Manual
	ETR125kW Series Solution User Manual
ET100kW Series	ET100kW Series Quick Installation Guide
	ET100 Series Solution User Manual

11 Contact Information

GoodWe Technologies Co., Ltd.
No. 90 Zijin Road, High-tech District, Suzhou, China
400-998-1212
https://en.goodwe.com/
service@goodwe.com