GOODWE

User Manual

Grid-Tied PV Inverter

XS Series

(0.7-3.3kW) G3

V1.9-2026-06-29

Copyright © GoodWe Technologies Co.,Ltd. 2026. All rights reserved.

No part of this manual can be reproduced or transmitted to the public platform in any form or by any means without the prior written authorization of GoodWe Technologies Co.,Ltd.

Trademarks

GOODWE and other GoodWe trademarks are trademarks of GoodWe Technologies Co.,Ltd. All other trademarks or registered trademarks mentioned in this manual are owned by the company.

NOTICE

The information in this user manual is subject to change due to product updates This guide cannot replace the product labels or the safety precautions in the user manual unless otherwise specified. All descriptions here are for guidance only.

CONTENT

1 About This Manual 1

1.1 Applicable Model 1

1.2 Target Audience 1

1.3 Symbol Definition 2

2 Safety Precaution 3

2.1 General Safety 3

2.2 DC Side 3

2.3 AC Side 4

2.4 Inverter 4

2.5 Personnel Requirements 5

2.6 EU Declaration of Conformity 5

3 Product Introduction 6

3.1 Application Scenarios 6

3.2 Circuit Diagram 6

3.3 Supported Grid Types 7

3.4 Features 7

3.5 Inverter Operation Mode 11

3.6 Appearance 12

3.6.1 Parts 12

3.6.2 Indicator Description 13

3.6.3 Nameplate 14

4 Check and Storage 15

4.1 Check Before Receiving 15

4.2 Deliverables 15

4.3 Storage 16

5 Installation 17

5.1 Installation Requirements 17

5.2 Inverter Installation 19

5.2.1 Moving the Inverter 19

5.2.2 Installing the Inverter 20

6 Electrical Connection 21
6.1 Safety Precaution 21
6.2 Connecting the PE cable 21
6.3 Connecting the DC Input Cable 22
6.4 Connecting the AC Output Cable 23
6.5 Communication 27
6.5.1 Connecting the Communication Cable (optional) 30
6.5.2 DRM Mode Description 32
6.5.3 Installing the Communication Module 34

7 Equipment Commissioning 35
7.1 Check Before Power ON 35
7.2 Power On 35

8 System Commissioning 36
8.1 Indicators and Buttons 36
8.2 Setting Inverter Parameters via Display Screen 36
8.2.1 Introduction to the Menu 38
8.2.2 Introduction to Inverter Parameters 39
8.3 Local Upgrade of Inverter Software Version 40
8.4 Setting Inverter Parameters via App 41
8.4.1 Download and Install SEMS+ App 41
8.5 Power Plant Monitoring via SEMS+ WEB 42

9 Maintenance 43
9.1 Power OFF the Inverter 43
9.2 Removing the Inverter 43
9.3 Disposing of the Inverter 43
9.4 Troubleshooting 44
9.5 Routine Maintenance 52

10 Technical Parameters 53

11 Term Explanation 62

1 About This Manual

This manual describes the product information, installation, electrical connection, commissioning, troubleshooting and maintenance. Read through this manual before installing and operating the product. All the installers and users have to be familiar with the product features, functions, and safety precautions. This manual is subject to update without notice. For more product details and latest documents, visit https://en.goodwe.com.

1.1 Applicable Model

This manual applies to the listed inverters below (XS for short):

Model	Nominal Output Power	Nominal Output Voltage
GW700-XS-30	0.7kW	220/230/240V, L/N/PE
GW1000-XS-30	1kW	
GW1500-XS-30	1.5kW	
GW2000-XS-30	2kW	
GW2500-XS-30	2.5kW	
GW3000-XS-30	3kW	
GW3300-XS-30	3.3kW	
GW3300-XS-B30	3.3kW	
GW2K-XS-L-G30	2kW	127V, L/N/PE

1.2 Target Audience

This manual applies to trained and knowledgeable technical professionals only. The technical personnel has to be familiar with the product, local standards, and electric systems.

1.3 Symbol Definition

Different levels of warning messages in this manual are defined as follows:

DANGER
Indicates a high-level hazard that, if not avoided, will result in death or serious injury.
WARNING
Indicates a medium-level hazard that, if not avoided, could result in death or serious injury.
CAUTION
Indicates a low-level hazard that, if not avoided, could result in minor or moderate injury.
NOTICE
Highlights key information and supplements the texts. Or some skills and methods to solve product-related problems to save time.

2 Safety Precaution

Please strictly follow these safety instructions in the user manual during the operation.

NOTICE

The inverters are designed and tested to strictly comply with related safety rules. Read and follow all the safety instructions and cautions before any operations. Improper operation might cause personal injury or property damage as the inverters are electrical equipment.

2.1 General Safety

NOTICE

- The information in this user manual is subject to change due to product updates This guide cannot replace the product labels or the safety precautions in the user manual unless otherwise specified. All descriptions in the manual are for guidance only.
- Before installations, read through the user manual to learn about the product and the precautions.
- All operations should be performed by trained and knowledgeable technicians who are familiar with local standards and safety regulations.
- Check the deliverables for correct model, complete contents, and intact appearance. Contact after-sales service for help if necessary.
- Use insulating tools and wear personal protective equipment when operating the equipment to ensure personal safety. Wear anti-static gloves, cloths, and wrist strips when touching electronic devices to protect the inverter from damage.
- The inverter has not been tested to AS/NZS 4777.2:2020 for multiple inverter combinations and/or multiple phase inverter combinations so combinations should be used or external devices should be used in accordance with the requirements of AS/NZS 4777.1.
- Strictly follow the installation, operation, and configuration instructions in this guide and user manual. The manufacturer shall not be liable for equipment damage or personal injury if you do not follow the instructions. For more warranty details, please visit https://en.goodwe.com/warranty.

2.2 DC Side

⚠ DANGER

- Connect the inverter's DC cables using the delivered DC connectors and wiring terminals. Severe damage might happen if other types of DC connectors or wiring terminals are used, which are beyond the manufacturer's liability.
- For equipment supporting PV string connection, the PV input terminals have a weak surge current withstand capability. It is strictly forbidden to power on the equipment directly from the PV ports using a DC voltage source. If powering on from the PV ports is necessary, please follow the steps below. Damage caused by improper operation is considered user-inflicted and is not covered under the product warranty.

1. First, limit the output current of the DC voltage source to within the maximum allowable input current range of the PV ports.
2. Then, close the DC switch of the inverter.
3. Finally, slowly increase the output voltage of the DC source from zero to the target value at a rate ≤50V/s.

WARNING

- Ensure the component frames and the bracket system are securely grounded.
- Ensure the DC cables are connected tightly, securely and correctly. Improper wiring may result in poor contact or high impedance, and damage to the inverter.
- Use a multimeter to measure the DC cable, ensuring that the positive and negative poles are correct; The voltage should be under the permissible range. Damage caused by reverse connection or over-voltage is not within the responsibility of the equipment manufacturer.
- Do not connect one PV string to more than one inverter at the same time. Otherwise, it may cause damage to the inverter.
- The PV modules used with the inverter must have an IEC61730 class A rating.

2.3 AC Side

WARNING

- The voltage and frequency at the connecting point should meet the on-grid requirements.
- Additional protective devices like circuit breakers or fuses are recommended on the AC side. The specification of the protective device must be greater than 1.25 times the maximum output current of the inverter.
- The protective grounding cable of the inverter must be firmly connected. When multiple inverters are used, ensure that the protective grounding points of all inverter chassis shells are equipotentially connected.
- You are recommended to use copper core cables as AC output cables. Contact the manufacturer if you want to use other cables.

2.4 Inverter

DANGER

- Do not apply mechanical load to the terminals, otherwise the terminals can be damaged.
- All labels and warning marks should be visible after the installation. Do not cover, scrawl, or damage any label on the equipment.
- Do not disassemble, modify, or replace any part of the inverter without official authorization from the manufacturer. Otherwise, it may cause damage to the equipment, which shall not be borne by the manufacturer.
- Testing to AS/NZS 4777.2:2020 for multiple inverter combinations has not been conducted.
- Inverters are prohibited from being installed in multi-phase scenarios.
- Warning labels on the inverter are as follows:

	HIGH VOLTAGE HAZARD. High voltage exists during the inverter's running. Disconnect all incoming power and turn off the product before working on it.	5min	Delayed discharge. Wait 5 minutes after power off until the components are completely discharged.
	Read through the user manual before any operations.		Potential risks exist. Wear proper Personnel Protective Equipment before any operations.
	High-temperature hazard. Do not touch the product under operation to avoid being burnt.		Grounding point.

	CE Mark.		Do not dispose of the inverter as household waste.Dispose of the product in compliance with local laws and regulations, or send it back to the manufacturer.
	RCM Mark.	-	-

2.5 Personnel Requirements

NOTICE
• Personnel who install or maintain the equipment must be strictly trained, learn about safety precautions and correct operations. • Only qualified professionals or trained personnel are allowed to install, operate, maintain, and replace the equipment or parts.

2.6 EU Declaration of Conformity

GoodWe Technologies Co., Ltd. hereby declares that the equipment with wireless communication modules sold in the European market meets the requirements of the following directives:

- Radio Equipment Directive 2014/53/EU (RED)
- Restrictions of Hazardous Substances Directive 2011/65/EU and (EU) 2015/863 (RoHS)
- Waste Electrical and Electronic Equipment 2012/19/EU
- Registration, Evaluation, Authorization and Restriction of Chemicals (EC) No 1907/2006 (REACH)

GoodWe Technologies Co., Ltd. hereby declares that the equipment without wireless communication modules sold in the European market meets the requirements of the following directives:

- Electromagnetic compatibility Directive 2014/30/EU (EMC)
- Electrical Apparatus Low Voltage Directive 2014/35/EU (LVD)
- Restrictions of Hazardous Substances Directive 2011/65/EU and (EU) 2015/863 (RoHS)
- Waste Electrical and Electronic Equipment 2012/19/EU
- Registration, Evaluation, Authorization and Restriction of Chemicals (EC) No 1907/2006 (REACH)

You can download the EU Declaration of Conformity on https://en.goodwe.com.

3 Product Introduction

3.1 Application Scenarios

The XS G3 series inverter is a single-phase series photovoltaic grid-tied inverter. The inverter can convert the direct current generated by photovoltaic solar panels into alternating current that meets the requirements of the power grid and feed it into the power grid. The main application scenarios of the inverter are as follows:

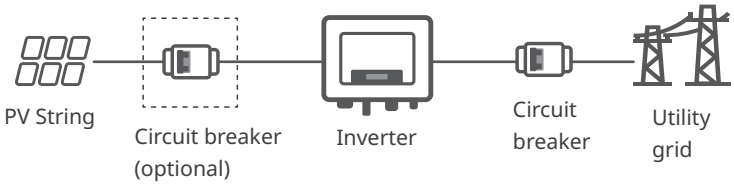

Model

GW700-XS-30

1 2 3 4

No.	Referring to	Description
1	Brand Code	GW: GoodWe
2	Nominal Power	700: the nominal power is 700W.
3	XS Series	XS: XS Series
4	Version code	30: the version of the inverter is 3.0.

3.2 Circuit Diagram

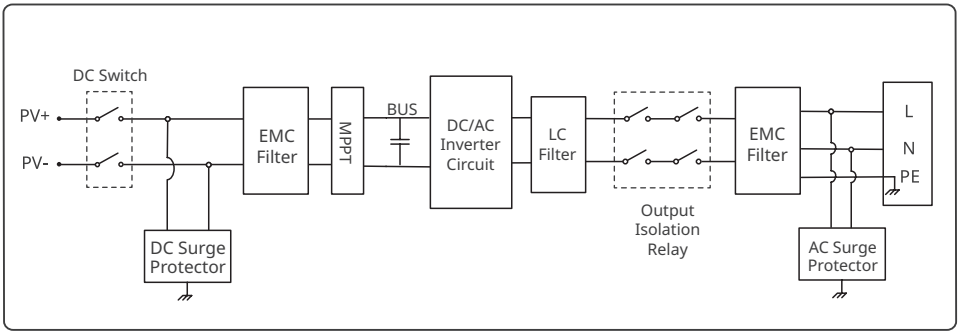

3.3 Supported Grid Types

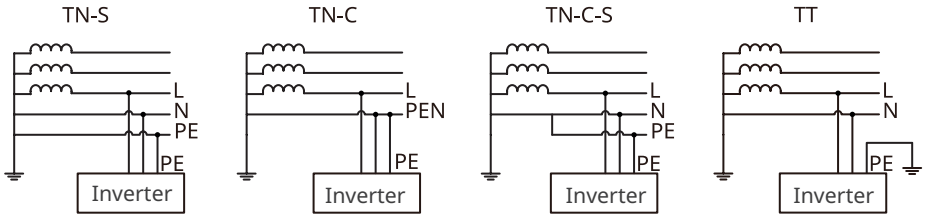

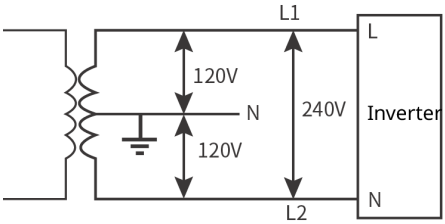

TNNET0017

3.4 Features

NOTICE
For specific inverter functions, please refer to the actual model configuration.

Power derating

In order to ensure the safe operation of the inverter and meet local safety regulations, the inverter will automatically reduce the output power when the operating environment is not ideal. The following are the factors that may occur power derating. Please try to avoid them when the inverter is working.

The inverter will shutdown for protection until the AFCI alarms are cleared. After clearing the alarms, the inverter can automatically reconnect to the grid.

- Unfavorable environmental conditions, e.g., direct sunlight, high temperature, etc.
- Inverter's output power percentage has been set.
- Changes in grid voltage and frequency.
- Higher input voltage value.
- Higher input current value.

AFCI Detection (Optional)

Reasons to occur electric arcs.

- Damaged connectors in the PV or battery system.
- Wrong connected or broken cables.
- Aging connectors and cables.

Methods to detect electric arcs

- The inverter has an integrated AFCI function satisfies IEC63027.
- When the inverter detects an electric arc, users can find the time of the fault and the detailed phenomenon through the App.

- The inverter will shutdown for protection until the AFCI alarms are cleared. After clearing the alarms, the inverter can automatically reconnect to the grid.
  - Automatic reconnection: The alarm can be cleared automatically in 5 minutes if the inverter triggers a fault for less than 5 times within 24 hours.
  - Manual reconnection: The inverter will shutdown for protection after the 5th electric arc fault within 24 hours. The inverter cannot work normally until the fault is solved. Please refer to the App User Manual for detailed operations.

The AFCI function is disabled by default at the factory. To use it, please enable the "AFCI Detection" function through the "Advanced Settings" interface in the App.

Model	Tag	Description
GW700-XS-30	F-I-AFPE-1-1-1	F: Full coverage I: Integrated AFPE: Detection and interruption capability provided 1: 1 monitored string per input port 1: 1 input ports per channel 1: 1 monitored channels
GW1000-XS-30		
GW1500-XS-30		
GW2000-XS-30		
GW2500-XS-30		
GW3000-XS-30		
GW3300-XS-30		
GW3300-XS-B30		
GW2K-XS-L-G30		

Load Control

The inverter reserves a dry contact control port to support the connection of SG Ready certified heat pumps and controllable loads, which is used to turn on or off the loads.

The load control methods are as follows:

- Switch mode: You can control the opening and closing of the load through the "switch" button.
- Time setting mode: You can set the time to turn on or off the loads, and the loads will be turned on or off automatically within the set time period.
- Power setting mode: You can set a power value by yourself. When the output power of the inverter exceeds the set value, the load will turn on.

The load control function is disabled by default. If you need to use it, please enable and set the "Load Control" function through the "More" interface on the App.

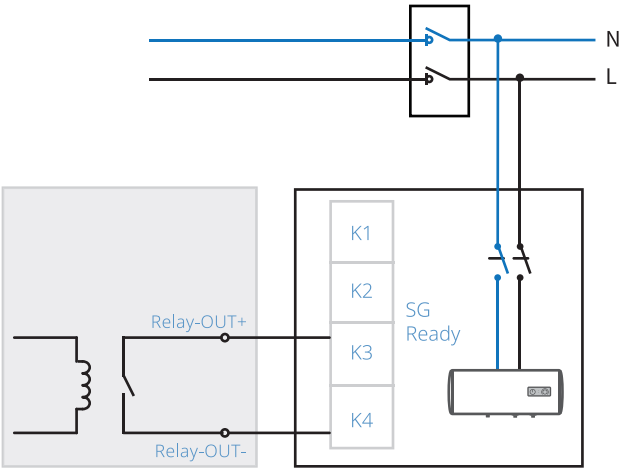

Communication

The inverter supports setting parameters through WiFi or Bluetooth in a short distance. Support connecting monitoring platforms through 4G, WiFi or LAN to monitor the operation status of inverters, power station operations, etc.

- Bluetooth: meets Bluetooth 5.1 standard.
- WiFi: Wireless IEEE 802.11 b/g/n @2.4 GHz.
- LAN: Ethernet with 10M/100Mbps adaptive speed.
- 4G (optional): It supports connecting to monitoring platforms through 4G communication.

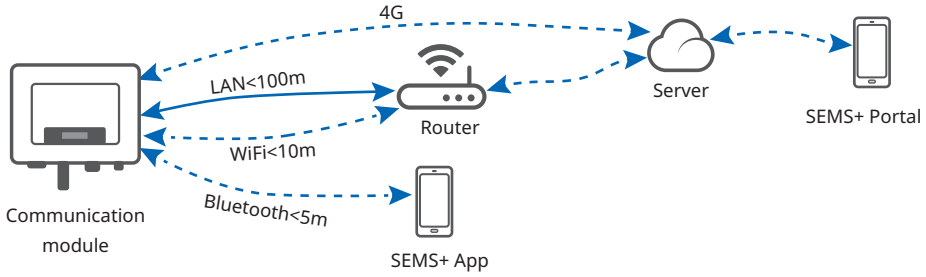

Nighttime Power Supply

In the event of insufficient or no lighting at night, the inverter can draw power from the grid to maintain its basic functions (such as monitoring, communication, and safety modules), enabling 24-hour load monitoring, nighttime remote upgrades, and other features.

24h Load Monitoring

NOTICE
• Some inverters only support AC side power supply and do not support PV side power supply. • Some inverters support both PV side and AC side power supply.

The inverter monitors load power consumption around the clock. The smart meter measures the data at the inverter's grid connection point and transmits it to the inverter. The inverter then uses the smart dongle to transmit power generation information and grid connection point data to the cloud-based monitoring platform. The monitoring platform calculates the load power consumption data, thereby enabling 24-hour real-time monitoring of load power consumption.

3.5 Inverter Operation Mode

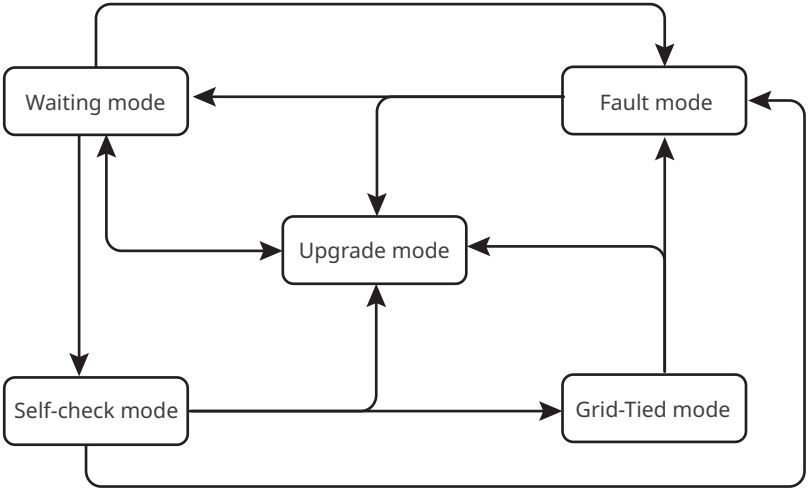

No.	Parts	Description
1	Waiting mode	Waiting stage after the inverter is powered on. • When the conditions are met, it enters the self-check mode. • If there is a fault, it enters the fault mode. • If an upgrade request is received, it enters upgrade mode.
2	Self-check mode	Before the inverter starts up, it continuously performs self-check, initialization, etc. • When the conditions are met, it enters the grid-tied mode, and the inverter starts on grid connection. • If an upgrade request is received, it enters upgrade mode. • If the self-check is not passed, it enters the fault mode.
3	Grid-Tied mode	The inverter is grid-tied successfully. • If a fault is detected, it enters the fault mode. • If an upgrade request is received, it enters upgrade mode.
4	Fault mode	If a fault is detected, the inverter enters the fault mode. When the fault is cleared, it enters the wait mode. After the wait mode ends, the inverter detects the operating status and then turns to the next mode.
5	Upgrade mode	Turn to this mode when upgrading the inverter program. When the program upgrade is completed, enter wait mode. After the wait mode ends, the inverter detects the operating status and then turns to the next mode.

3.6 Appearance

3.6.1 Parts

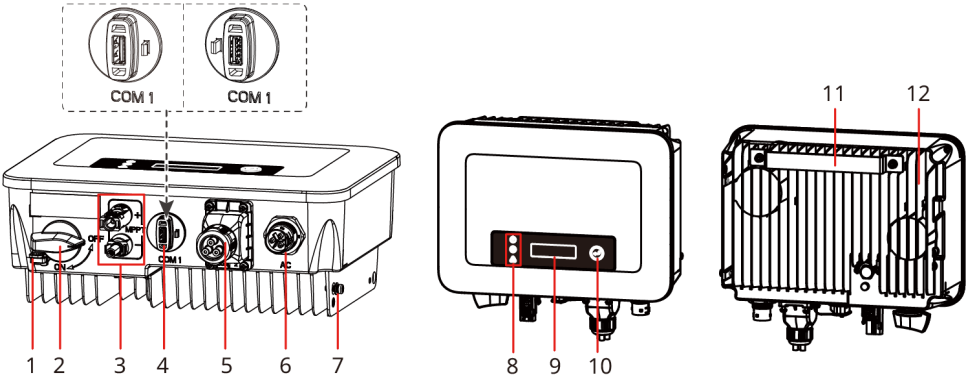

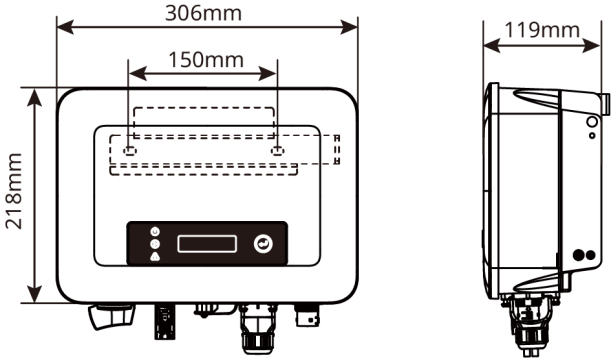

No.	Parts	Description
1	DC Switch lock	Only supported for Australian models. When the inverter is powered off for operation, please lock the DC switch to OFF state to prevent danger such as electric shock.
2	DC Switch	Starts or stops DC input.
3	DC input terminal	It is used for connecting PV module DC input cable.
4	Communication module port	• Used for connecting communication modules, such as WiFi,WiFi/LAN or 4G communication modules. Please choose the module type according to actual needs. • Supports connecting USB flash drives and can locally upgrade the inverter software version.
5	Communication port	Used for connecting RS485, remote shutdown, CT, DRED, and dry connection point communication cable.

No.	Parts	Description
6	AC output terminal	Used for connecting the AC output cable to connect the inverter to the power grid.
7	PE terminal	Used for connecting the grounding cable.
8	Indicator	Indicates the working status of the inverter.
9	Display screen	View inverter information.
10	Key	Used for operating the display screen .
11	Mounting Plate	Used to install the inverter.
12	Heat sink	Used for heat dissipation of the inverter.

3.6.2 Indicator Description

Equipment with display screen

Classification	Status	Description
Power		Yellow light steady ON: Wireless monitoring is normal.
		One blink: Wireless module reset or reset.
		Two blinks: It is not connected to router/base station.
		Four blinks: It is not connected to monitoring website. It is not connected to monitoring server.
		Blink:RS485 communication is normal.
		Yellow light OFF: The wireless module is restoring factory settings.
Running		Green light steady ON: The power grid is normal and successfully connected to the grid.
		Green light OFF: It is not connected to the grid.
Fault		Red light steady ON: System fault.
		OFF: No fault.

3.6.3 Nameplate

The nameplate is for reference only.

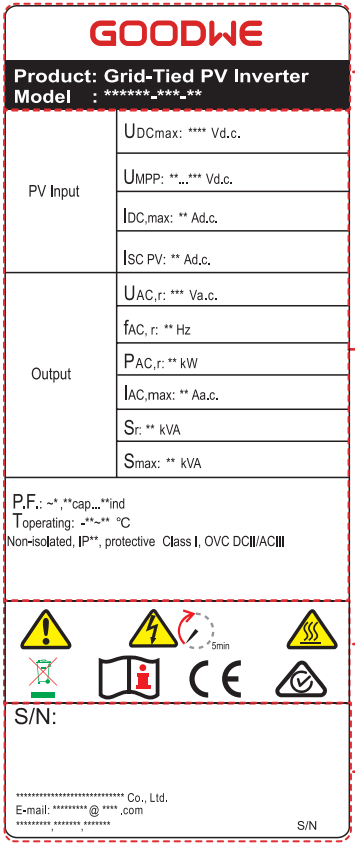

GW trademark, product type, and product model

Technical parameters

Safety symbols and certification marks

Contact information and serial number

4 Check and Storage

4.1 Check Before Receiving

Check the following items before receiving the product.

1. Check the outer packing box for damage, such as holes, cracks, deformation, and other signs of equipment damage. Do not unpack the package and contact the supplier as soon as possible if any damage is found.
2. Check the inverter model. If the inverter model is not what you requested, do not unpack the product and contact the supplier.
3. Check the deliverables for correct model, complete contents, and intact appearance. Contact the supplier as soon as possible if any damage is found.

4.2 Deliverables

WARNING

Connect the DC cables with the delivered terminals. The manufacturer shall not be liable for the damage if other terminals are used.

NOTICE

- [1] Australia only.
- [2] The types of communication modules include WiFi, WiFi/LAN or 4G, etc. and the actual deliverables depend on the selected inverter communication method.

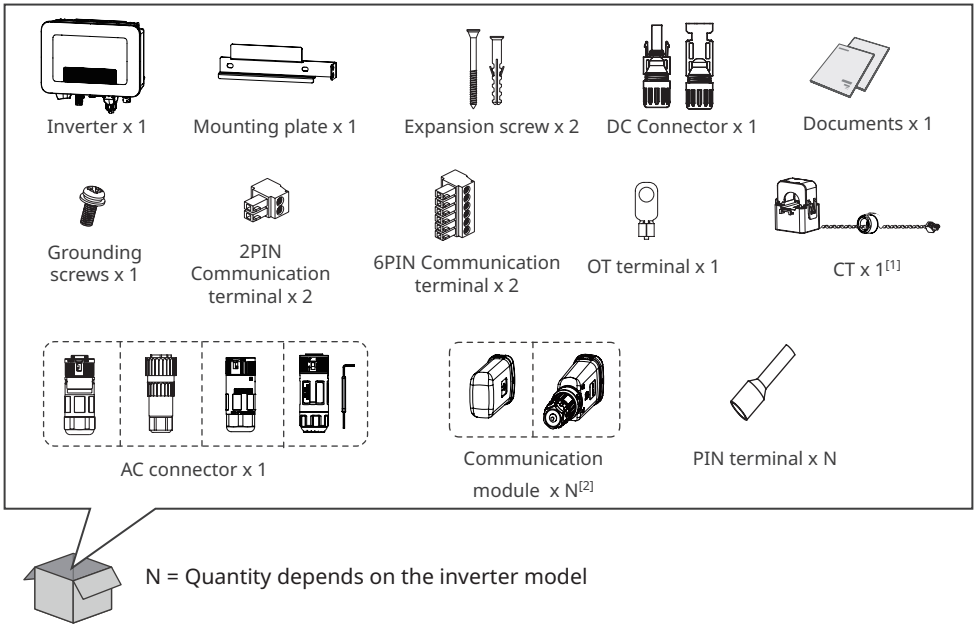

4.3 Storage

If the equipment is not to be installed or used immediately, please ensure that the storage environment meets the following requirements:

1. Do not unpack the outer package or throw the desiccant away.
2. Store the equipment in a clean place. Make sure the temperature and humidity are appropriate and no condensation.
3. The height and direction of the stacking inverters should follow the instructions on the packing box.
4. The inverters must be stacked with caution to prevent them from falling.
5. If the inverter has been long term stored, it should be checked by professionals before being put into use.
6. If the inverter has been stored for more than two years or has not been in operation for more than six months after installation, it is recommended to be inspected and tested by professionals before being put into use.
7. To ensure good electrical performance of the internal electronic components of the inverter, it is recommended to power it on every 6 months during storage. If it has not been powered on for more than 6 months, it is recommended to to be inspected and tested by professionals before being put into use.

5 Installation

5.1 Installation Requirements

Installation Environment Requirements

1. Do not install the equipment in a place near flammable, explosive, or corrosive materials.
2. Install the equipment on a surface that is solid enough to bear the inverter weight.
3. The place to install the equipment shall be well-ventilated for heat dissipation and large enough for operations.
4. The equipment with a high ingress protection rating can be installed indoors or outdoors. The temperature and humidity at the installation site should be within the appropriate range.
5. Install the equipment in a sheltered place to avoid direct sunlight, rain, and snow. Build a sunshade if it is needed.
6. Do not install the equipment in a place that is easy to touch, especially within children's reach. High temperature exists when the equipment is working. Do not touch the surface to avoid burning.
7. Install the equipment at a height that is convenient for operation and maintenance, and ensure that the equipment indicator lights, all labels are easy to view, and the wiring terminals are easy to operate.
8. The altitude to install the equipment shall be lower than the maximum working altitude 4000m.
9. Install the equipment away from electromagnetic interference. If there is any radio or wireless communication equipment below 30MHz near the equipment, you have to:
   - Add a multi-turn winding ferrite core at the DC input line or AC output line of the inverter, or add a low-pass EMI filter.
   - Install the inverter at least 30m far away from the wireless equipment.

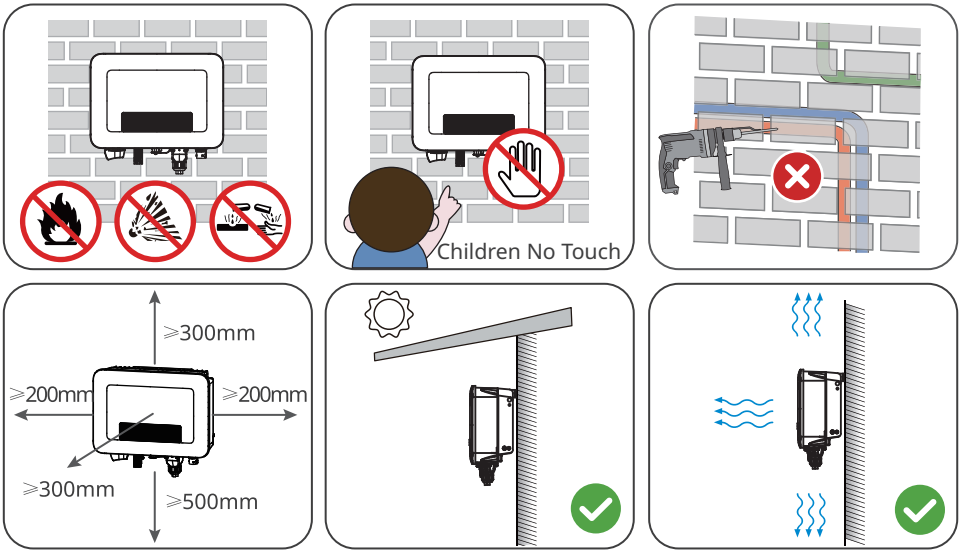

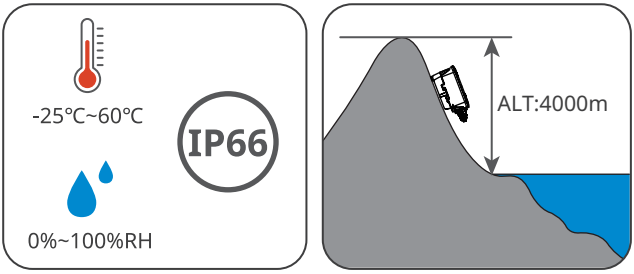

Mounting Support Requirements

- The mounting support shall be nonflammable and fireproof.
- Please ensure that the installation surface is sturdy and that the carrier meets the load-bearing requirements of the equipment.
- Do not install the product on the support with poor sound insulation to avoid the noise bothering people nearby.

Installation Angle Requirements

- Install the inverter vertically or at a maximum back tilt of 15 degrees.
- Do not install the inverter upside down, forward tilt, back forward tilt, or horizontally.

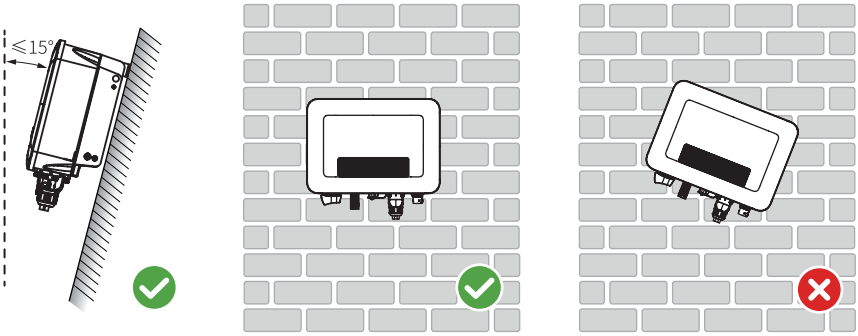

Installation Tool Requirements

The following tools are recommended when installing the equipment. Use other auxiliary tools on site if necessary.

5.2 Inverter Installation

5.2.1 Moving the Inverter

CAUTION

- Operations such as transportation, shipment, installation and so on shall in compliance with the laws and regulations of the country or region where the inverter is located.
- Move the inverter to the site before installation. Follow the instructions below to avoid personal injury or equipment damage.
  1. Consider the weight of the equipment before moving it. Assign enough personnel to move the equipment to avoid personal injury.
  2. Wear safety gloves to avoid personal injury.
  3. Keep balance to avoid falling down when moving the equipment.

5.2.2 Installing the Inverter

NOTICE

- Avoid the water pipes and cables buried in the wall when drilling holes.
- Wear goggles and a dust mask to prevent the dust from being inhaled or contacting eyes when drilling holes.
- The DC switch lock is provided by the user, with an aperture of φ 8mm, please choose a suitable DC switch lock, otherwise it may cause installation failure.
- The anti-theft lock is provided by the user, with an aperture of φ 8mm, please choose a suitable anti-theft lock, otherwise it may cause installation failure.
- Make sure the inverter is firmly installed in case of falling down.

Step 1: Put the plate on the wall or bracket horizontally and mark positions for drilling holes.
Step 2: Use an impact drill with a drill bit diameter of 8mm to drill holes, ensuring a depth of approximately 60mm.
Step 3: Use the expansion bolts to fix the plate on the wall or bracket.
Step 4: (Australia only) Install DC switch lock.
Step 5: Install the inverter on the mounting plate.Fix mounting plate and inverter.Install the mounting plate lock.

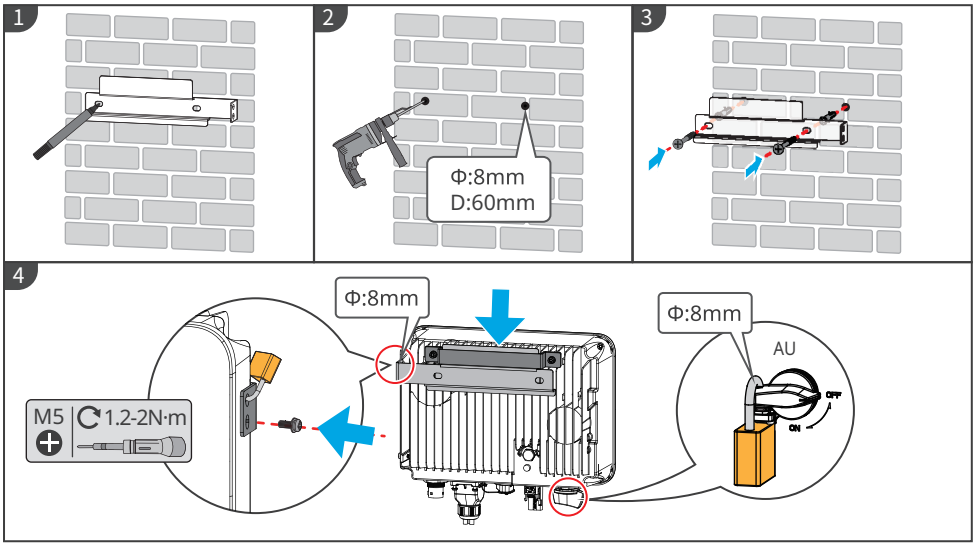

6 Electrical Connection

6.1 Safety Precaution

DANGER

- Disconnect the DC switch and the AC output switch of the inverter to power off the inverter before any electrical connections. Do not work with power on. Otherwise, an electric shock may occur.
- All operations, cables, and component specifications used during the electrical connection must comply with local laws and regulations.
- If the tension is too large, the cable may be poorly connected. Reserve a certain length of the cable before connecting it to the inverter cable port.

NOTICE

- Wear personal protective equipment like safety shoes, safety gloves, and insulating gloves during electrical connections.
- All electrical connections should be performed by qualified professionals.
- Cable colors in this document are for reference only. The cable specifications shall meet local laws and regulations.

6.2 Connecting the PE cable

WARNING

- The protective grounding of the chassis casing cannot replace the PE cables of the AC output port. When wiring, ensure that the two PE cables are reliably connected.
- When multiple inverters are used, ensure that the protective grounding points of all inverter chassis shells are equipotentially connected.
- To improve the corrosion resistance of the terminal, you are recommended to apply silica gel or paint on the ground terminal after installing the PE cable.
- Please provide your own protective grounding wire, recommended specifications:
  - Type: single-core outdoor copper wire.
  - Conductor cross-sectional area: 4-6mm^2.

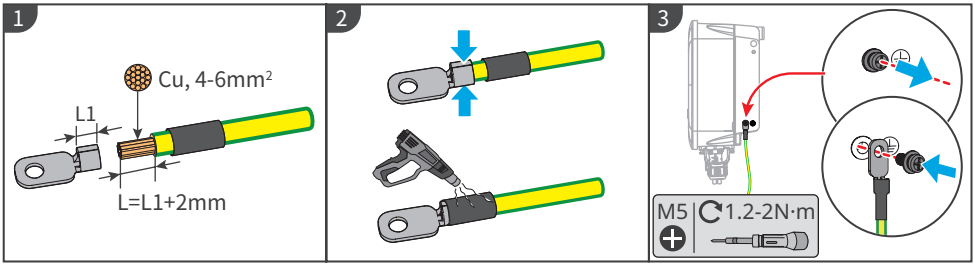

6.3 Connecting the DC Input Cable

DANGER

Confirm the following information before connecting the PV string to the inverter. Otherwise, the inverter may be damaged permanently or even cause fire and cause personal and property losses.

1. Make sure that the max short circuit current and the max input voltage per MPPT are within the permissible range.
2. Make sure that the positive pole of the PV string connects to the PV+ of the inverter. And the negative pole of the PV string connects to the PV- of the inverter.

WARNING

- Please use the DC connector shipped with the box. The manufacturer shall not be liable for the equipment damage caused by the use of incompatible connectors.
- The PV strings cannot be grounded. Ensure the minimum insulation resistance of PV string to the ground meets the minimum insulation resistance requirements before connecting the PV string to the inverter.
- The DC input cable should be prepared by the customer. Recommended specifications:
- Type: Outdoor PV cable that meets the maximum input voltage of the inverter.
- Conductor cross-sectional area: 4-6 mm^2 (MC4).

NOTICE

If the DC input terminal of the inverter does not need to be connected to the PV string, use a waterproof cover to block the terminal, otherwise it will affect the equipment's protection level.

Operation steps for connecting the DC input cables.

Step 1: Prepare the DC cable.
Step 2: Crimp the DC input terminal.
Step 3: Disassemble the DC connector.
Step 4: Make a DC cable and test the DC input voltage.
Step 5: Connect the DC connector to the inverter DC terminal.

MC4 DC connector

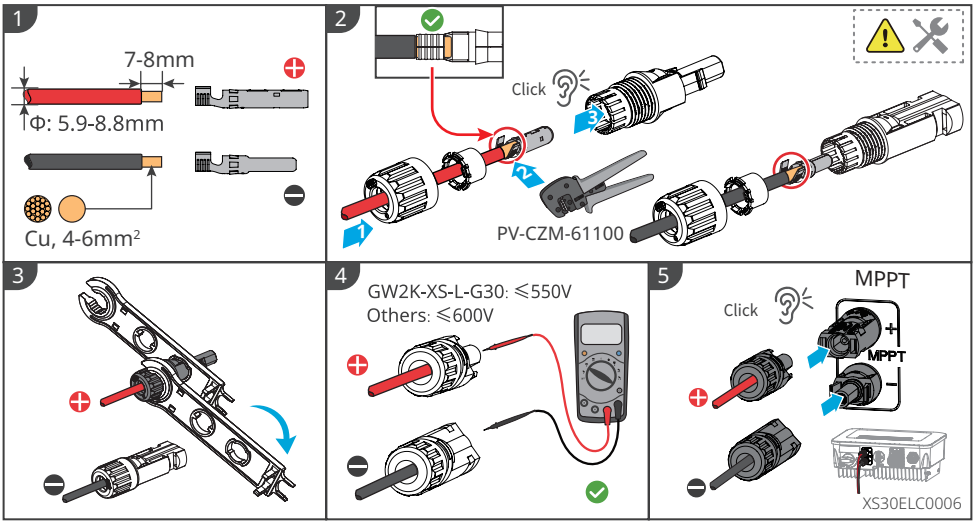

6.4 Connecting the AC Output Cable

WARNING

- Do not connect loads between the inverter and the AC switch directly connected to the inverter.
- The residual current monitoring unit (RCMU) is integrated into the inverter. When the inverter detects a leakage current exceeds the allowable value, it will disconnect from the grid quickly.

NOTICE

- Install one AC output switch for each inverter. Multiple inverters cannot share one AC switch.
- If the inverter AC output terminal is not used, please use a waterproof cover to block the terminal, otherwise it will affect the equipment's protection level.

An AC circuit breaker should be installed on the AC side to make sure that the inverter can safely disconnect the grid when an exception happens. Select an appropriate AC circuit breaker in compliance with local laws and regulations. The following switches are for reference:

Inverter Model	AC Switch Specification
GW700-XS-30	16A
GW1000-XS-30	
GW1500-XS-30	
GW2000-XS-30	25A
GW2500-XS-30	
GW3000-XS-30	
GW3300-XS-30	
GW3300-XS-B30	
GW2K-XS-L-G30	

The inverter needs to be externally connected with an A type RCD (residual current monitoring device) for protection when the DC component of the leakage current exceeds the limit value. The following RCDs are for reference:

Inverter Model	RCD Specification
GW700-XS-30	300mA
GW1000-XS-30	
GW1500-XS-30	
GW2000-XS-30	
GW2500-XS-30	
GW3000-XS-30	
GW3300-XS-30	
GW3300-XS-B30	
GW2K-XS-L-G30	

⚠ WARNING

- When wiring, the AC output cables and the "L", "N", and "PE" ports of the AC terminal need to be perfectly matched. If the cable connection is incorrect, it will cause damage to the inverter.
- Ensure that the whole cable cores are inserted into the AC terminal holes. No part of the cable core can be exposed.
- Ensure that the cables are connected securely. Otherwise, the operation of the equipment may cause overheating of the wiring terminals and damage to the inverter.
- Avoid excessive bending of cables.

Step 1: Make an AC output cable.
Step 2: Disassemble the AC terminal.
Step 3: Connect the AC output cable to the AC terminal.
Step 4: Connect the AC terminal to the inverter.

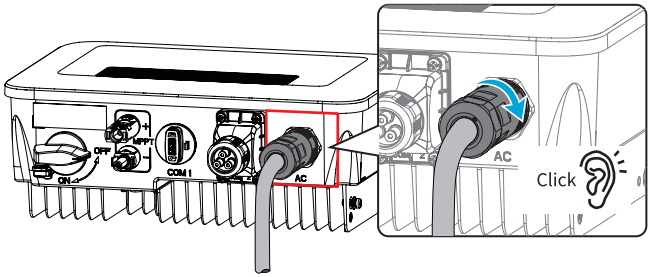

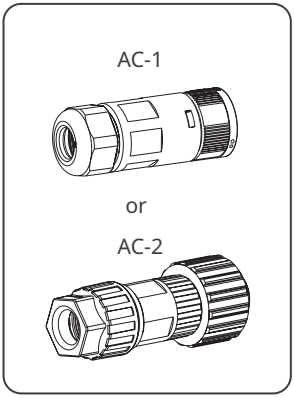

AC-1

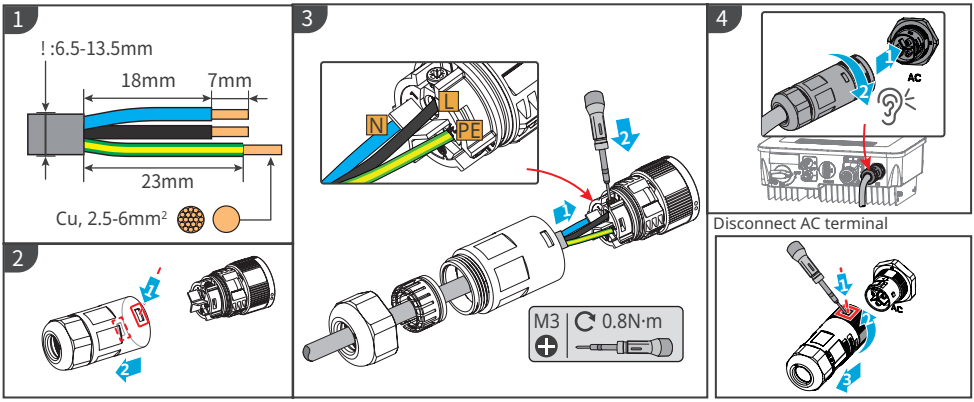

XS30ELC0007

AC-2

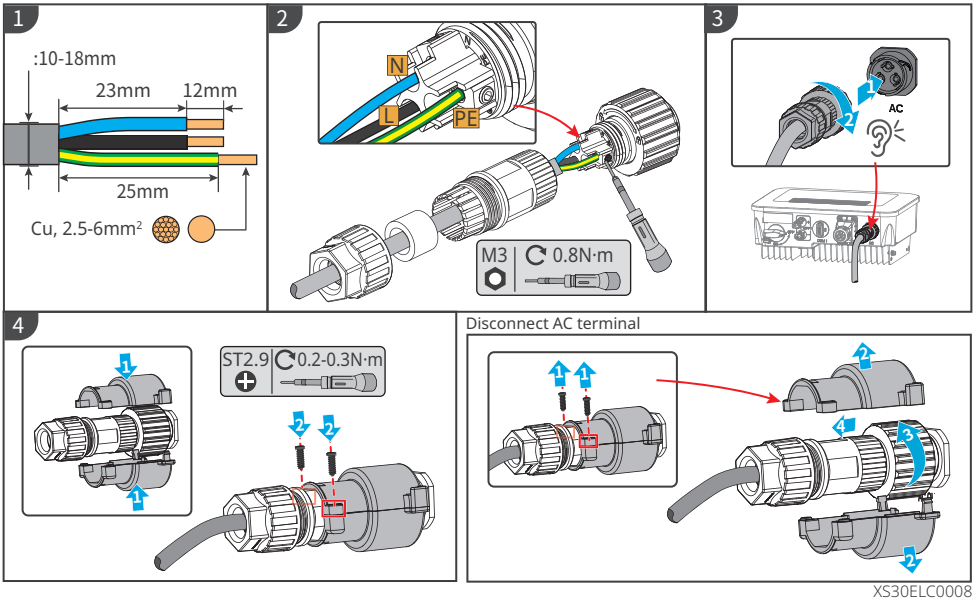

XS30ELC0008

AC-3

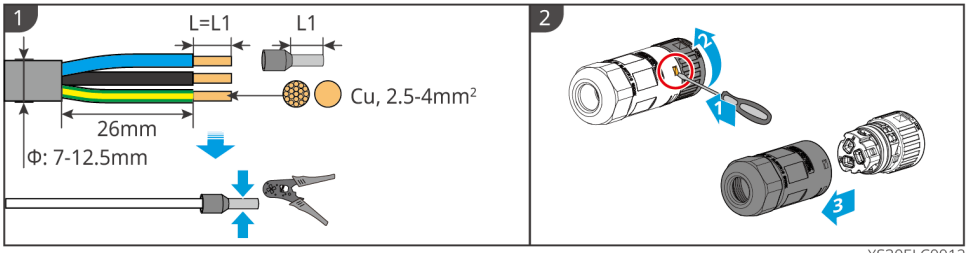

XS30ELC0012

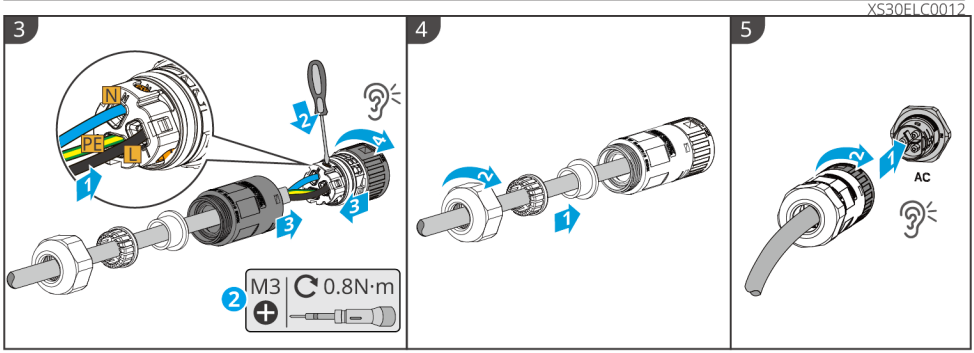

XS30ELC0007

AC-4

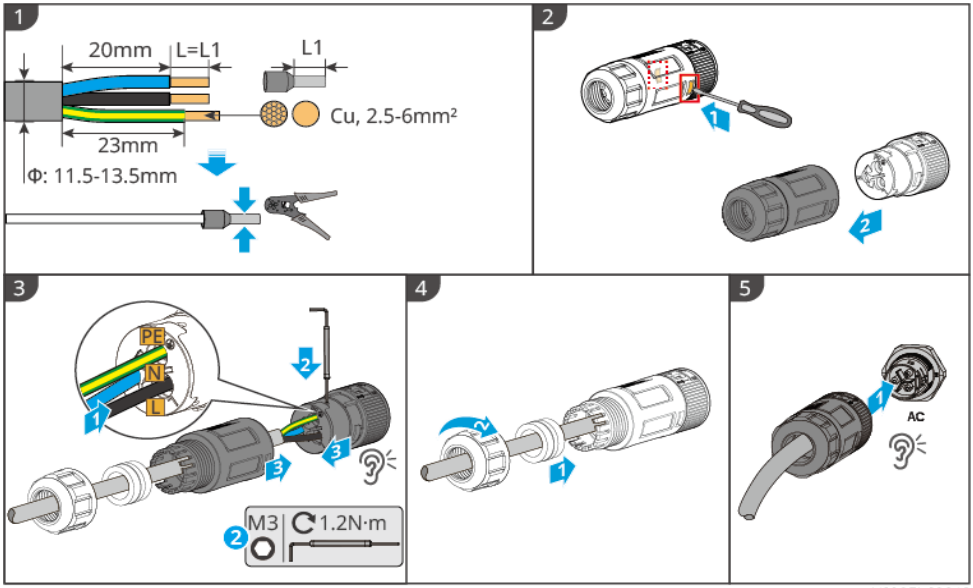

6.5 Communication

NOTICE

The specific function configuration of the product, please refer to the actual model of the inverter in the actual region.

Power Limit Networking Scheme

The power generation of PV power stations is self consumed. When the electrical equipment cannot consume all the electricity, and the electricity needs to be fed into the grid. The power generation of the power station can be monitored and controlled through smart meters, data collectors, or smart energy controllers SEC1000 to control the power generation fed into the grid.

Single phase networking scenario (CT90)

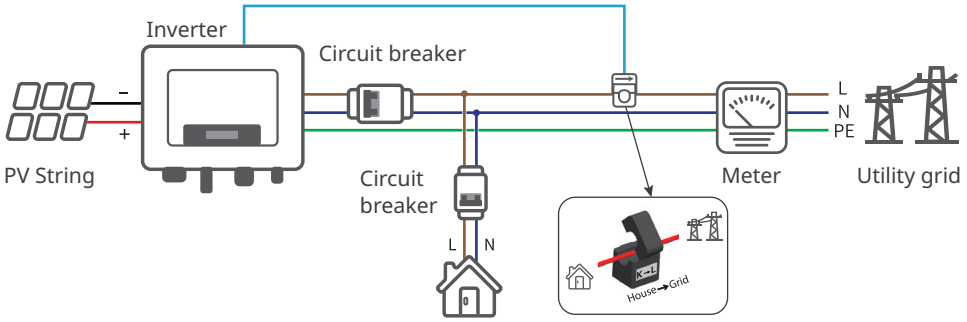

Single Inverter Power Limit Networking Solution For Split Phase Grid

NOTICE

The CT can be prepared by the user or purchased from the manufacturer, with a ratio of 90A/45mA.

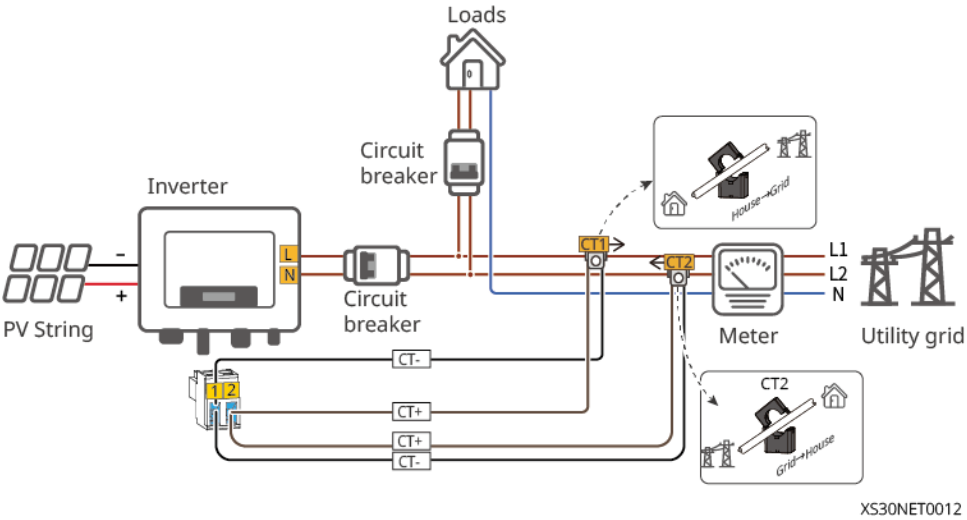

Single phase networking scenario (GM1000/GMK110)

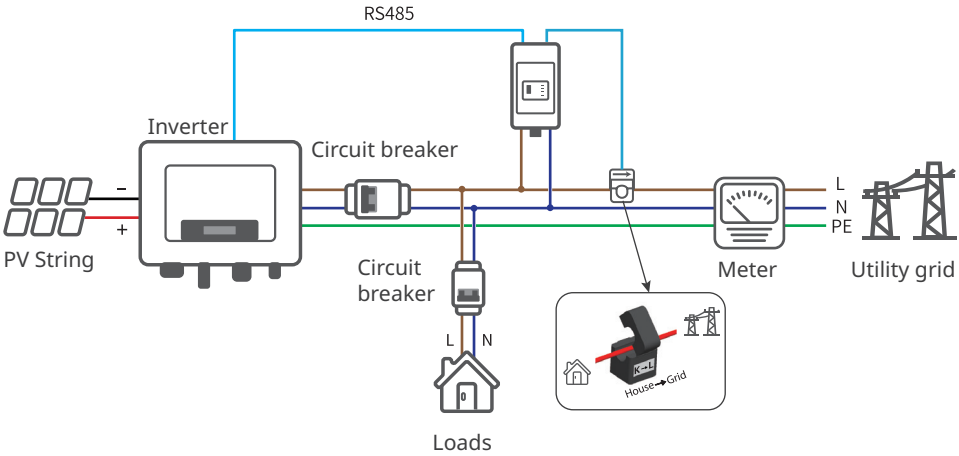

Single phase networking scenario (HK1000)

NOTICE

When the inverter works with HK1000, it only supports load monitoring function.

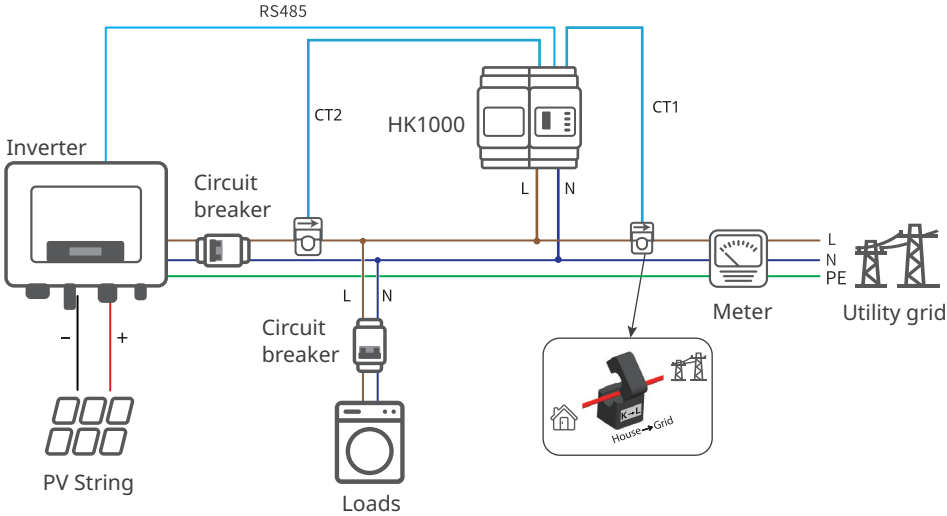

All-phases networking scenario (GM3000/HK3000/GMK330)

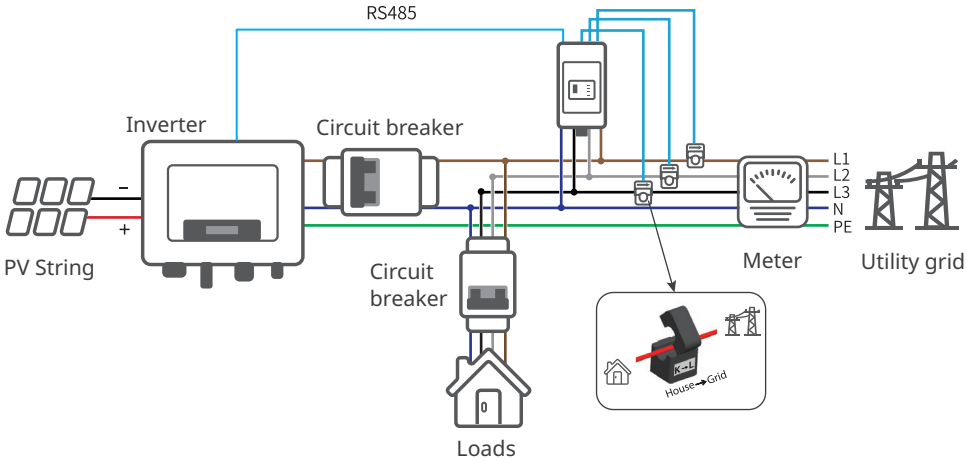

NOTICE

After the wiring is completed, set relevant parameters through the LCD display screen or App to complete the function of power limit or output power limitation.

6.5.1 Connecting the Communication Cable (optional)

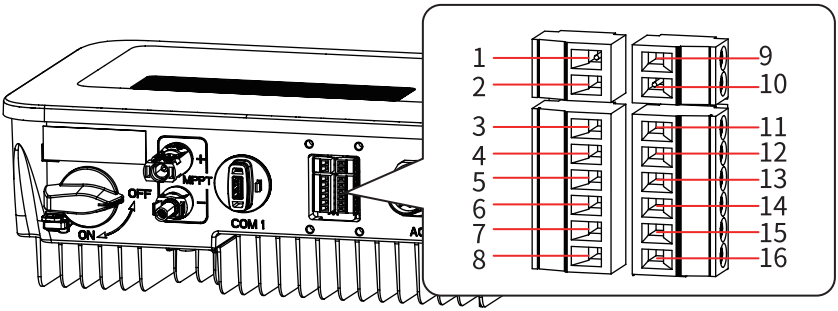

Communication type	Port Definition	Description
CT	1: CT+ 2: CT-	By using CT to achieve power limit function, if you need supporting equipment, you can contact the inverter manufacturer to purchase.
RS485	3: RS485_A1 4: RS485_B1	It supports connecting to the upper computer for commissioning. Please contact the after-sales service for detail information.
Meter	5: RS485_A2 6: RS485_B2	RS485 port for connecting electricity meter.
Remote shutdown or Emergency shutdown (India only)	7: DI- 8: DI+	The AC side of the inverter is automatically disconnected after the emergency switch gives a shutdown signal, stopping grid connection. An external emergency shutdown switch is required and controlled through the DI port: • Remote Shutdown: if the DI port is connected, the machine will be started; if the DI port is disconnected, the machine will be stopped. • Emergency Shutdown: if DI port is connected, it will stop the machine; if DI port is disconnected, it will start the machine.
Dry contact	9: Relay-OUT+ 10: Relay-OUT-	Connects the dry contact signal.
DRED or RCR	11: COM/DRMO or REF_1 12: REFGEN or REF_2 13: DRM4/8 or DI_4 14: DRM3/7 or DI_3 15: DRM2/6 or DI_2 16: DRM1/5 or DI_1	DRED (Demand Response Enabling Device): Provides DRED signal control ports to meet the scheduling requirements of the Australian and New Zealand DRED power grids. The DRM1-4 function is reserved, and the DRM device needs to be provided by the user. RCR (Ripple Control Receiver): Provides RCR signal control ports to meet the dispatching needs of power grids in Germany and other countries and regions..

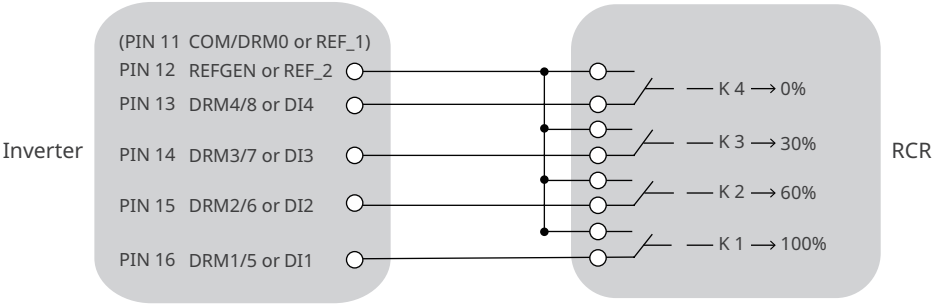

6.5.2 DRM Mode Description

DRM Function Wiring Diagram

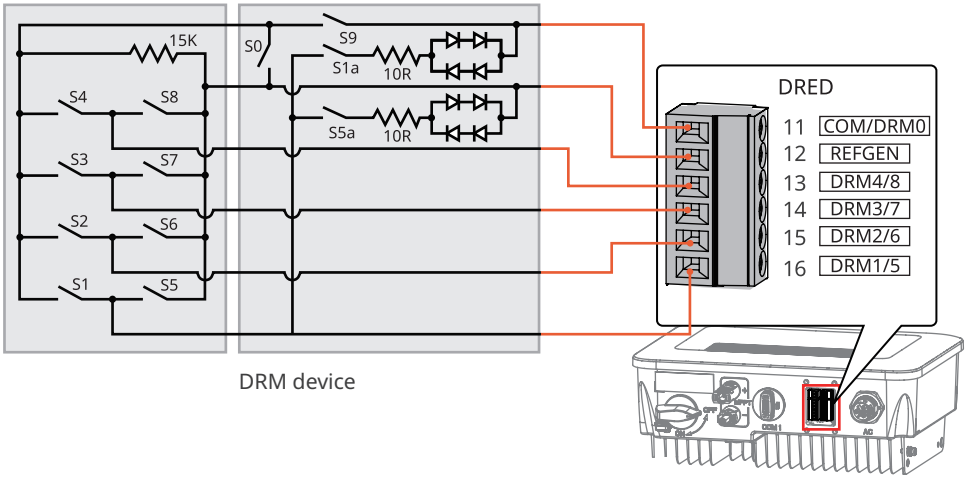

The inverter supports DRMO and DRM5-8 modes. The requirements for each mode are as follows:

Mode	Inverter port	Requirement	Description
DRM0	COM/ DRM0	Turn on S0 and the inverter shuts down. Turn off S0 and the inverter is back to on-grid.	-
DRM5	DRM1/5	Turn on S5 and the inverter does not output Active Power.	When two or more than 2 DRMs are working simultaneously, select any two of them that can satisfy the strictest requirement.
DRM6	DRM2/6	lurn on S6 and the inverter outputs Active Power no more than 509 of its rated power.	
DRM7	DRM3/7	Turn on S7 and the inverter outputs Active Power no more than 7596 of its rated power. In the meantime, the inverter consumes the maximum Reactive Power.	
DRM8	DRM4/8	Turn on S8 and the inverter is back to Active Power output.	

NOTICE

- Make sure that the communication device is connected to the right COM port. Route the communication cable far away from any interference source or power cable to prevent the signal from being influenced.
- When connecting CT and dry contact communication cables, please use a 2PIN communication terminal.
- When connecting RS485, remote shutdown, and DRED communication cables, please use a 6PIN communication terminal.
- The DRED communication terminal is equipped with a resistor, which needs to be removed and properly stored when using the DRED function.
- Enable the DRED, RCR or remote shutdown function via App after cable connections.
- If the inverter is not connected to the DRED device or remote shutdown device, do not enable these functions in the App, otherwise the inverter cannot be connected to the grid for operation.

Cable: Outdoor shielded twisted pair. The cable should meet local requirements.

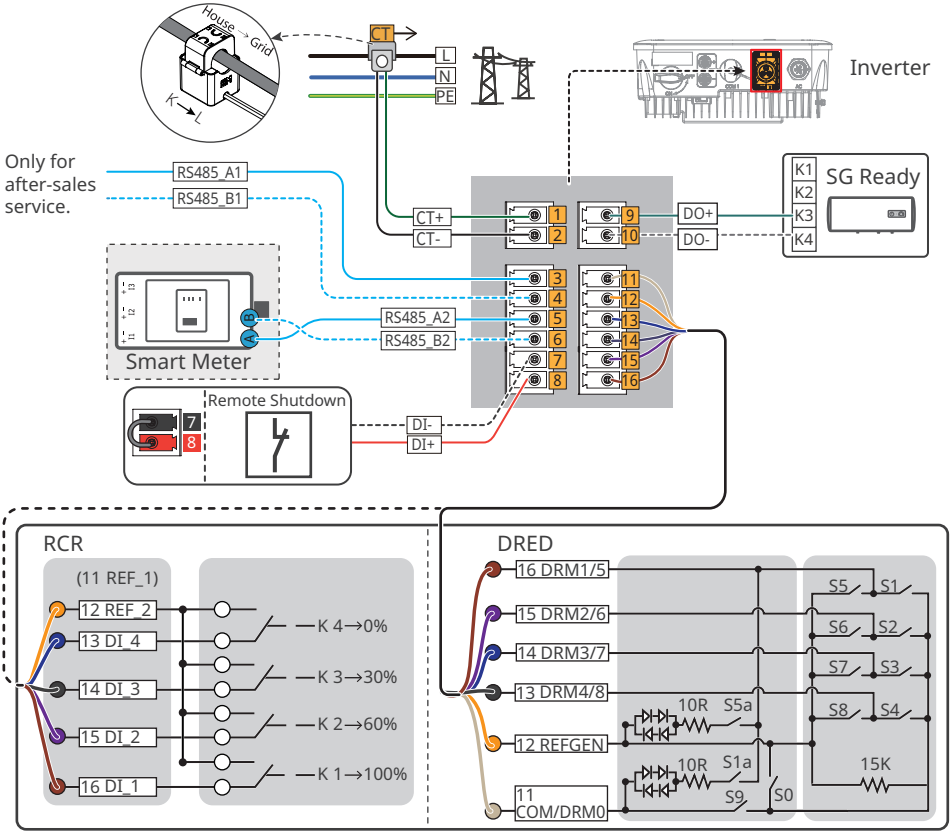

XS30NET0002

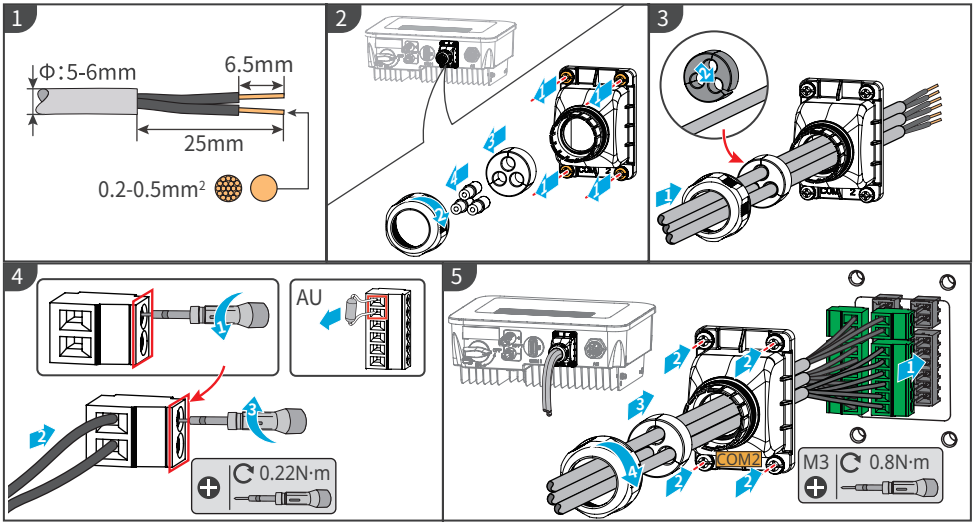

NOTICE
After the wiring is completed, set relevant parameters through the LCD display screen or App to complete the function of power limit or output power limitation.

6.5.3 Installing the Communication Module

Supports setting inverter parameters through WiFi, WiFi/LAN and 4G communication modules connected to mobile phones or web interfaces, viewing inverter operation and error information, and timely understanding of system status.

WiFi Kit, WiFi Kit-20, WiFi/LAN Kit, WiFi/LAN Kit-20, 4G Kit, modules.

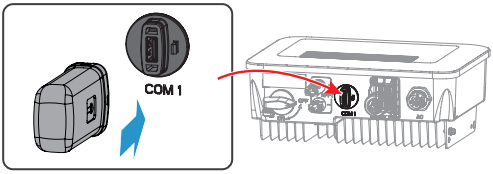

communication module type: plug in and click connection type.

NOTICE
Refer to the delivered communication module user manual to get more introduction to the module. For more detailed information, visit https://en.goodwe.com.

7 Equipment Commissioning

7.1 Check Before Power ON

No.	Check Item
1	The product is firmly installed at a clean place that is well-ventilated and easy-to operate.
2	The PE, DC input, AC output, and communication cables are connected correctly and securely.
3	Cable ties are intact, routed properly and evenly.
4	Unused ports and terminals are sealed.
5	The voltage and frequency at the connection point meet the inverter grid connection requirements.

7.2 Power On

Step 1 Turn on the AC switch between the inverter and the utility grid.
Step 2 Turn on the DC switch of the inverter.
Step 3 (optional) Turn on the DC switch between the inverter and the PV string.

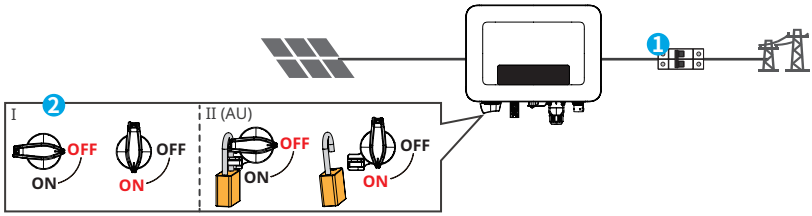

Power On

Turn on: ❶ → ❷

8 System Commissioning

8.1 Indicators and Buttons

Equipment with display screen

Classification	Status	Description
Power		Yellow light steady ON: Wireless monitoring is normal.
		One blink: Wireless module reset.
		Two blinks: It is not connected to router/base station.
		Four blinks: It is not connected to monitoring website. It is not connected to monitoring server.
		Blink:RS485 communication is normal.
		Yellow light OFF: The wireless module is restoring factory settings.
Running		Green light steady ON: The power grid is normal and successfully connected to the grid.
		Green light OFF: It is not connected to the grid.
Fault		Red light steady ON: System fault.
		OFF: No fault.

8.2 Setting Inverter Parameters via Display Screen

NOTICE

- The corresponding inverter firmware version of the page images in this chapter is V1.00.00; Communication version: V1.00. The page images are for reference only.
- The parameter name, range, and default values may be changed or adjusted in the future. When configuring, the actual display shall prevail.
- The power parameters of the inverter must be set by professionals to avoid setting errors that may affect the inverter's power generation.

Display Button Description

- In all levels of menus, if the time without operation exceeds a certain value, the LCD display screen will darken and the interface display will automatically jump to the initial interface.
- Short press of the operation button: Switch menu interface and adjust parameter values.
- Long press of the operation button: After the parameter value adjustment is completed, long press and hold to set the parameters successfully; Enter the next sub-menu.

Example of key operation:

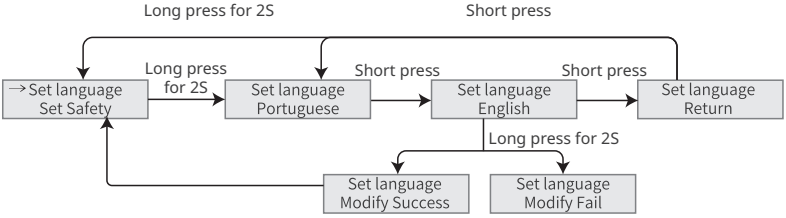

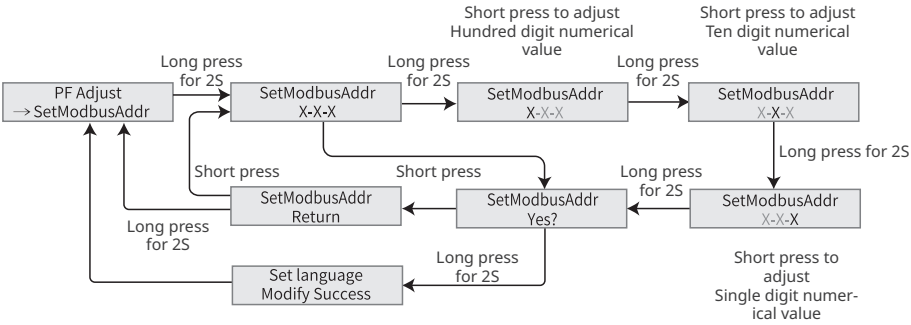

For Australia:

The user needs to enter a password to enter the sub-menu for parameter settings.
For the Australian Market, to comply with AS/NZS 4777.2:2020 please select grid/safety code from Australia A, Australia B or Australia C. please contact your local grid operator for which setting to apply

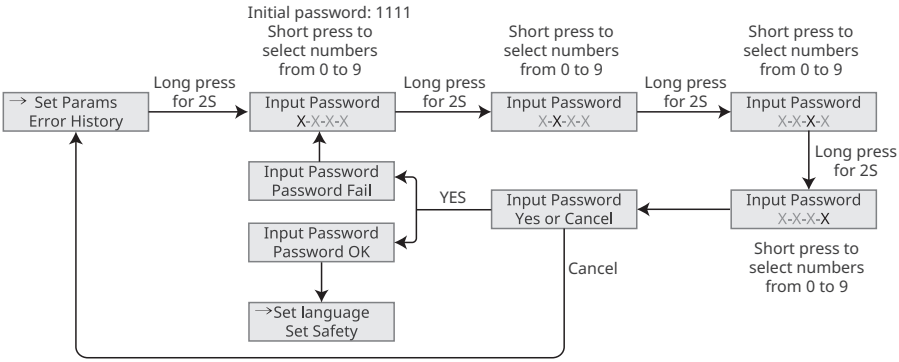

8.2.1 Introduction to the Menu

This section introduces the menu structure of the display screen, which facilitates users to access all levels of menus, view inverter information, and set parameters.

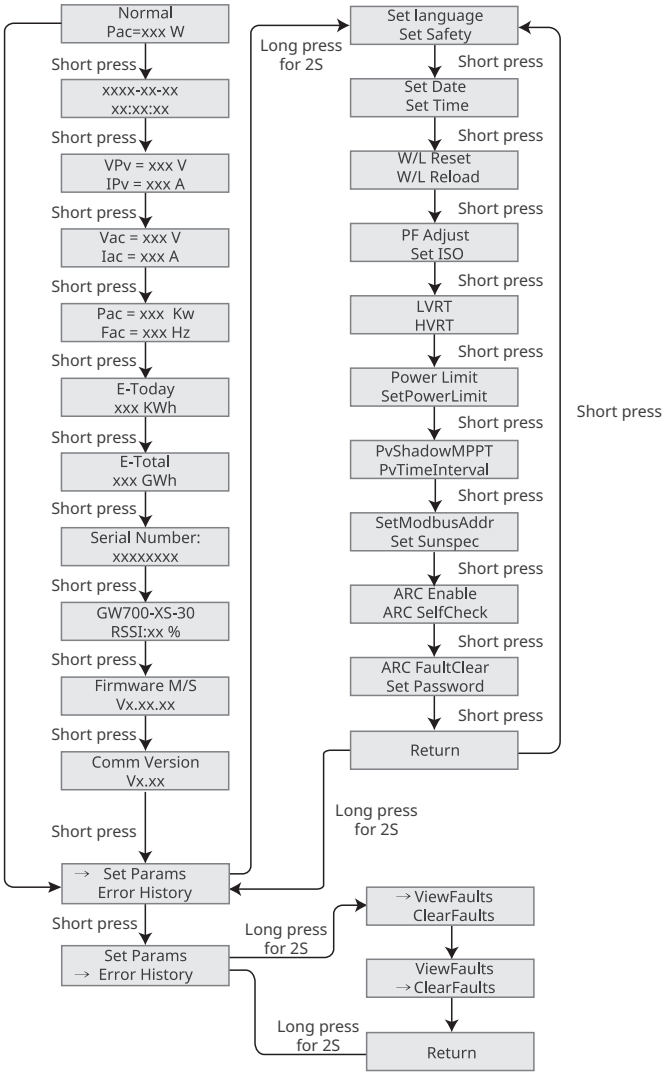

8.2.2 Introduction to Inverter Parameters

Parameters	Description
Normal	Home page. Indicates the real-time power of the inverter.
****-**-** **:**:**	Check the time of the country/region.
VPv	Check the DC input voltage of the inverter.
IPv	Check the DC input current of the inverter.
Vac	Check the voltage of the utility grid.
Iac	Check the AC output current of the inverter.
Fac	Check the frequency of the utility grid.
E-Today	Check the generated power of the system for that day.
E-Total	Check the total generated power of the system.
Serial Number	Check the serial number of the inverter.
GW700-XS-30 RSSI:xx%	Check the signal strength of the communication module.
Firmware M/S	Check the firmware version.
Comm Version	Check the ARM software version.
Set Language	Set according to actual needs.
Set Safety	Set the safety country/region in compliance with the local grid standards and application scenario of the inverter.
Set Date	Set time according to the actual time in the country/region where the inverter is located.
Set Time	
W/L Reset	Power off and restart the communication module.
W/L Reload	Restore the factory settings of the communication module. Reconfigure the communication module network parameters after restoring the factory settings,
PF Adjust	Set the power factor of the inverter according to the actual situation.
SetModbusAddr	Set the actual Modbus address.
Set ISO	Indicates the PV-PE insulation resistance threshold value. When the detected value is under the set value, the ISO fault occurs.
LVRT	With LVRT on, the inverter will stay connected with the utility grid after a short-term utility grid low voltage exception occurs.
HVRT	With HVRT on, the inverter will stay connected with the utility grid after a short-term utility grid high voltage exception occurs.
Power Limit	Set the power feed back into the utility grid according to the actual situation.
SetPowerLimit	

Parameters	Description
PvShadowMPPT	Enable the shadow scan function if the PV panels are shadowed.
PvTimeInterval	Set the scan time according to the actual needs.
SetSunspec	Set the Sunspec based on the actual communication method.
ARC Enable	ARC is optional and off by default. Enable or disable ARC accordingly.
ARC SelfCheck	Check whether ARC can work normally.
ARC FaultClear	Clear ARC alarm records.
Set Password	The password can be changed. Keep the changed password in mind after changing it. Contact the after-sales service if you forget the password.
ViewFaults	Check historical error message records of the inverter.
ClearFaults	Clear historical error message records of the inverter.

8.3 Local Upgrade of Inverter Software Version

Step 1: Contact the after-sales service center to obtain the inverter software upgrade package.
Step 2: Store the upgrade package in the USB flash drive.
Step 3: Insert the USB flash drive into the inverter USB interface, and upgrade the inverter software version according to the interface prompts.

8.4 Setting Inverter Parameters via App

SEMS+ App is a software for remote power station monitoring or local device debugging. It supports installers or owners:

- Remotely monitor the operation of power stations and set parameters for stations and devices.
- Locally connect to devices, view device operation status, and set device parameters.

For detailed functions, please refer to the SEMS+ App User Manual. The user manual can be obtained from the official website or by scanning the QR code below.

SEMS+ App User Manual

8.4.1 Download and Install SEMS+ App

Phone Requirements

- Phone OS requirements: Android 7.0 and above, iOS 15.1 and above.
- Phone supports web browser and connects to the Internet.

Download Methods

Method 1:

Search for SEMS+ in Google Play, App Store, Huawei, Honor, Xiaomi, OPPO, and vivo app stores to download and install.

Phone supports WLAN/Bluetooth functionality.

SEMS0163

Method 2:

Scan the QR code below to do

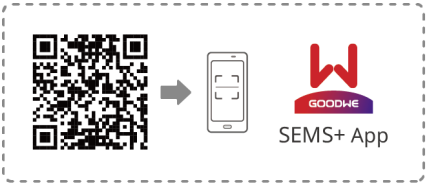

SEMS0164

Add Desktop Widget

- When the app version is V2.5.2 or above, it supports adding the SEMS+ App to the phone's desktop.
- The steps to add desktop widgets vary by operating system; please follow the actual steps.
- After adding the desktop widget, you can quickly view the power station operation status without opening the app.wnload and install.

8.5 Power Plant Monitoring via SEMS+ WEB

SEMS+ WEB is a monitoring platform that communicates via WiFi or LAN. The following are the common functions of SEMS+ WEB:

- Manage organization or user information, etc.
- Add and monitor power plant information, etc.
- Maintain equipment.

For detailed functions, please refer to the SEMS+ WEB User Manual.

SEMS+ WEB User Manual

9 Maintenance

9.1 Power OFF the Inverter

DANGER

- Power off the inverter before operations and maintenance. Otherwise, the inverter may be damaged or electric shocks may occur.
- Delayed discharge. Wait until the components are discharged after power off.

Step 1: (Optional) Send a shutdown command to the inverter through App.
Step 2: Turn off the AC switch between the inverter and the utility grid.
Step 3: Turn off the DC switch of the inverter.

9.2 Removing the Inverter

WARNING

- Make sure that the inverter is powered off.
- Wear proper PPE before any operations.

Step 1: Disconnect all the cables, including DC cables, AC cables, communication cables, the communication module, and PE cables.
Step 2: Remove the inverter from the mounting plate.
Step 3: Remove the mounting plate.
Step 4: Store the inverter properly. Ensure that the storage conditions meet the requirements for future use.

9.3 Disposing of the Inverter

If the inverter cannot work anymore, dispose of it according to the local disposal requirements for electrical equipment waste. The inverter cannot be disposed of together with household waste.

9.4 Troubleshooting

Perform troubleshooting according to the following methods. Contact the after-sales service if these methods do not work.

Collect the information below before contacting the after-sales service, so that the problems can be solved quickly.

1. Inverter information like serial number, software version, installation date, fault time, fault frequency, etc.
2. Installation environment, including weather conditions, whether the modules are sheltered or shadowed, etc. It is recommended to provide some photos and videos to assist in analyzing the problem.
3. Utility grid situation.

No.	Fault	Cause	Solutions
1	Utility Loss	1. Utility grid power fails. 2. The AC cable is disconnected, or the AC breaker is off.	1. The alarm is automatically cleared after the grid power supply is restored. 2. Check whether the AC cable is connected and the AC breaker is on.
2	Grid Overvoltage	The grid voltage exceeds the permissible range, or the duration of high voltage exceeds the requirement of HVRT.	1. If the problem occurs occasionally, the utility grid may be abnormal temporarily. The inverter will recover automatically after detecting that the utility grid is normal. 2. If the problem occurs frequently, check whether the grid voltage is within the permissible range. • Contact the local power company if the grid voltage exceeds the permissible range. • Modify the overvoltage protection threshold, HVRT or disable the overvoltage protection function after obtaining the consent of the local power company if the grid frequency is within the permissible range. 3. Check whether the AC breaker and the output cables are connected securely and correctly if the problem persists.

No.	Fault	Cause	Solutions
3	Grid Rapid Overvoltage	The grid voltage is abnormal or ultra-high.	1. If the problem occurs occasionally, the utility grid may be abnormal temporarily. The inverter will recover automatically after detecting that the utility grid is normal. 2. Check if the power grid voltage has been operating at a high voltage for a long time. If it occurs frequently, please check if the power grid voltage is within the allowable range. • Contact the local power company if the grid voltage exceeds the permissible range. • Modify the grid overvoltage rapid protection threshold after obtaining the consent of the local power company if the grid voltage is within the permissible range.
4	Grid Undervoltage	The grid voltage is lower than the permissible range, or the duration of low voltage exceeds the requirement of LVRT.	1. If the problem occurs occasionally, the utility grid may be abnormal temporarily. The inverter will recover automatically after detecting that the utility grid is normal. 2. If the problem occurs frequently, check whether the grid voltage is within the permissible range. • Contact the local power company if the grid voltage exceeds the permissible range. • Modify the undervoltage protection threshold, LVRT or disable the undervoltage protection function after obtaining the consent of the local power company if the grid frequency is within the permissible range. 3. Check whether the AC breaker and the output cables are connected securely and correctly if the problem persists.

No.	Fault	Cause	Solutions
5	10min overvoltage protection	The moving average of grid voltage in 10min exceeds the range of safety requirements.	1. If the problem occurs occasionally, the utility grid may be abnormal temporarily. The inverter will recover automatically after detecting that the utility grid is normal. 2. Check if the power grid voltage has been operating at a high voltage for a long time. If it occurs frequently, please check if the power grid voltage is within the allowable range. • Contact the local power company if the grid voltage exceeds the permissible range. • Modify the grid overvoltage rapid protection threshold after obtaining the consent of the local power company if the grid voltage is within the permissible range.
6	Grid Overfrequency	Utility grid exception. The actual grid frequency exceeds the requirement of the local grid standard.	1. If the problem occurs occasionally, the utility grid may be abnormal temporarily. The inverter will recover automatically after detecting that the utility grid is normal. 2. If the problem occurs frequently, check whether the grid frequency is within the permissible range. • Contact the local power company if the grid frequency exceeds the permissible range. • Modify the overfrequency protection threshold or disable the overfrequency protection function after obtaining the consent of the local power company if the grid frequency is within the permissible range.

No.	Fault	Cause	Solutions
7	Grid Under-frequency	Utility grid exception. The actual grid frequency is lower than the requirement of the local grid standard.	1. If the problem occurs occasionally, the utility grid may be abnormal temporarily. The inverter will recover automatically after detecting that the utility grid is normal. 2. If the problem occurs frequently, check whether the grid frequency is within the permissible range. • Contact the local power company if the grid frequency exceeds the permissible range. • Modify the underfrequency protection threshold or disable the underfrequency protection function after obtaining the consent of the local power company if the grid frequency is within the permissible range. Or close “Grid Underfrequency” function.
8	Grid Frequency Instability	Utility grid exception. The actual grid frequency change rate does not meet the requirement of the local grid standard.	1. If the problem occurs occasionally, the utility grid may be abnormal temporarily. The inverter will recover automatically after detecting that the utility grid is normal. 2. If the problem occurs frequently, check whether the grid frequency is within the permissible range. • Contact the local power company if the grid frequency exceeds the permissible range. • Contact the dealer or the after-sales service if the grid frequency is within the permissible range.
9	Anti-islanding	The utility grid is disconnected. The utility grid is disconnected according to the safety regulations, but the grid voltage is maintained due to the loads.	1. Check whether the utility grid is disconnected. 2. Contact the dealer or the after-sales service.

No.	Fault	Cause	Solutions
10	LVRT Undervoltage	Utility grid exception. The duration of the utility grid exception exceeds the set time of LVRT.	1. If the problem occurs occasionally, the utility grid may be abnormal temporarily. The inverter will recover automatically after detecting that the utility grid is normal. 2. If the problem occurs frequently, check whether the grid frequency is within the permissible range. If not, contact the local power company. If yes, contact the dealer or the after-sales service.
11	HVRT Overvoltage	Utility grid exception. The duration of utility grid exception exceeds the set time of HVRT.	
12	30mAGfci Protection	The input insulation impedance becomes low when the inverter is working.	1. If the problem occurs occasionally, it may be caused by a cable exception. The inverter will recover automatically after the problem is solved. 2. Check whether the impedance between the PV string and PE is too low if the problem occurs frequently or persists.
13	60mAGfci Protection		
14	150mAGfci Protection		
15	Abnormal GFCI		
16	Large DC of AC current L1	The DC component of the output current exceeds the safety range or default range.	1. If the problem is caused by an external fault like a utility grid exception or frequency exception, the inverter will recover automatically after solving the problem. 2. If the problem occurs frequently and the PV station cannot work properly, contact the dealer or the after-sales service.
17	Large DC of AC current L2		

No.	Fault	Cause	Solutions
18	Low Insulation Res.(Earth fault alarm)	1. The PV string is short-circuited to PE. 2. The PV system is in a moist environment and the cable is not well insulated to the ground.	1. Check whether the resistance of the PV string to PE exceeds 50kΩ. If no, check the short circuit point. 2. Check whether the PE cable is connected correctly. 3. If the resistance is lower on rainy days, please reset the ISO. Inverters for the Australian and New Zealand markets can also be alerted in the following ways in the event of insulation impedance failure: 1. The inverter is equipped with the buzzer: the buzzer sounds continuously for 1 minute in case of failure; If the fault is not resolved, the buzzer sounds every 30 minutes. 2. Add the inverter to the monitoring platform, and set the alarm reminder, the alarm information can be sent to the customer by emails.
19	Abnormal Ground	1. The PE cable of the inverter is not connected well. 2. The L cable and N cable are connected reversely when output of the PV string is grounded.	1. Check whether the PE cable of the inverter is connected properly. 2. Check whether the L cable and N cable are connected reversely if output of the PV string is grounded.
20	Anti Reverse power Failure	Abnormal fluctuation of load	1. If the exception is caused by an external fault, the inverter will recover automatically after solving the problem. 2. If the problem occurs frequently and the PV station cannot work properly, contact the dealer or the after-sales service.
21	Internal Comm Loss	1. Frame format error 2. Parity checking error 3. Can bus offline 4. Hardware CRC error 5. Send (receive) control bit is receive (send). 6. Transmit to the unit that is not allowed.	Disconnect the AC output switch and DC input switch, then connect them 5 minutes later. Contact the dealer or the after-sales service if the problem persists.

No.	Fault	Cause	Solutions
22	AC HCT Check abnormal	The sampling of the AC HCT is abnormal.	Disconnect the AC output switch and DC input switch, then connect them 5 minutes later. Contact the dealer or the after-sales service if the problem persists.
23	GFCI HCT Check abnormal	The sampling of the GFCI HCT is abnormal.	Disconnect the AC output switch and DC input switch, then connect them 5 minutes later. Contact the dealer or the after-sales service if the problem persists.
24	Relay Check abnormal	1. The relay is abnormal or short-circuited. 2. The control circuit is abnormal. 3. The AC cable connection is abnormal, like a virtual connection or short circuit.	Disconnect the AC output switch and DC input switch, then connect them 5 minutes later. Contact the dealer or the after-sales service if the problem persists.
25	Abnormal Internal Fan	1. The power supply to the fan is abnormal. 2. Mechanical failure(blocked rotation). 3. Fan aging damage.	Disconnect the AC output switch and DC input switch, then connect them 5 minutes later. Contact the dealer or the after-sales service if the problem persists.
26	Flash Fault	The internal Flash storage is abnormal.	Disconnect the AC output switch and DC input switch, then connect them 5 minutes later. Contact the dealer or the after-sales service if the problem persists.
27	DC Arc Fault	1. The DC terminal is not firmly connected. 2. The DC cable is broken.	Read the Quick Installation Guide and check whether the cables are connected properly.
28	AFCI Self-test Fault	AFCI detection is abnormal.	Disconnect the AC output switch and DC input switch, then connect them 5 minutes later. Contact the dealer or the after-sales service if the problem persists.

No.	Fault	Cause	Solutions
29	Cavity Over-temperature	1. The inverter is installed in a place with poor ventilation. 2. The ambient temperature exceeds 60°C. 3. A fault occurs in the internal fan of the inverter.	1. Check the ventilation and the ambient temperature at the installation point. 2. If the ventilation is poor or the ambient temperature is too high, improve the ventilation and heat dissipation. 3. Contact the dealer or after-sales service if both the ventilation and the ambient temperature are normal.
30	BUS Overvoltage	1. The PV voltage is too high. 2. The sampling of the inverter BUS voltage is abnormal.	Disconnect the AC output switch and DC input switch, then connect them 5 minutes later. Contact the dealer or the after-sales service if the problem persists.
31	PV Input Overvoltage	The PV array configuration is not correct. Too many PV panels are connected in series in the PV string.	Check the serial connection of the PV array. Make sure that the open circuit voltage of the PV string is not higher than the maximum operating voltage of the inverter.
32	PV Continuous Hardware Overcurrent	1. The PV configuration is not proper. 2. The hardware is damaged.	Disconnect the AC output switch and DC input switch, then connect them 5 minutes later. Contact the dealer or the after-sales service if the problem persists.
33	PV Continuous Software Overcurrent	1. The PV configuration is not proper. 2. The hardware is damaged.	Disconnect the AC output switch and DC input switch, then connect them 5 minutes later. Contact the dealer or the after-sales service if the problem persists.
34	String Reversed	The PV string is connected reversely.	Check whether the PV1 and PV2 strings are connected reversely.

9.5 Routine Maintenance

Maintaining Item	Maintaining Method	Maintaining Period
System Clean	Check the heat sink, air intake, and air outlet for foreign matter or dust.	Once 6-12 months
DC Switch	Turn the DC switch on and off ten consecutive times to make sure that it is working properly.	Once a year
Electrical Connection	Check whether the cables are securely connected. Check whether the cables are broken or whether there is any exposed copper core.	Once 6-12 months
Sealing	Check whether all the terminals and ports are properly sealed. Reseal the cable hole if it is not sealed or too big.	Once a year

10 Technical Parameters

Technical Data	GW700-XS-30	GW1000-XS-30	GW1500-XS-30	GW2000-XS-30
Input				
Max. Input Power (W)	1,400	2,000	3,000	4,000
Max. Input Voltage (V)*1	600	600	600	600
MPPT Operating Voltage Range (V)*2	40~450	40~450	40~450	40~450
MPPT Voltage Range at Nominal Power (V)	60~450	86~450	130~450	170~450
Start-up Voltage (V)	50	50	50	50
Nominal Input Voltage (V)	360	360	360	360
Max. Input Current per MPPT (A)	16	16	16	16
Max. Short Circuit Current per MPPT (A)	25	25	25	25
Max. Backfeed Current to The Array (A)	0	0	0	0
Number of MPP Trackers	1	1	1	1
Number of Strings per MPPT	1	1	1	1
Output				
Nominal Output Power (W)	700	1,000	1,500	2,000
Nominal Output Apparent Power (VA)	700	1,000	1,500	2,000
Max. AC Active Power (W)	700	1,000	1,500	2,000
Max. AC Apparent Power (VA)	700	1,000	1,500	2,000
Nominal Power at 40°C (W). (Only for Brazil)	700	1,000	1,500	2,000
Max. Power at 40°C (Including AC Overload) (W). (Only for Brazil)	700	1,000	1,500	2,000
Nominal Output Voltage (V)	220/ 230/ 240,L/N/PE	220/ 230/ 240,L/N/PE	220/ 230/ 240,L/N/PE	220/ 230/ 240,L/N/PE
Output Voltage Range (V)	154~288 (according to local standard)	154~288 (according to local standard)	154~288 (according to local standard)	154~288 (according to local standard)
Nominal AC Grid Frequency (Hz)	50/60	50/60	50/60	50/60
AC Grid Frequency Range (Hz)	45~55/57~63	45~55/57~63	45~55/57~63	45~55/57~63
Max. Output Current (A)	3.2	4.6	6.9	9.1
Max. Output Fault Current (Peak and Duration) (A)	43(at2.2μs)	43(at2.2μs)	43(at2.2μs)	43(at2.2μs)

Technical Data	GW700-XS-30	GW1000-XS-30	GW1500-XS-30	GW2000-XS-30
Inrush Current (Peak and Duration) (A)	27.3(at 2μs)	27.3(at 2μs)	27.3(at 2μs)	27.3(at 2μs)
Nominal Output Current (A)(at 230V)	3.1	4.4	6.6	8.7
Power Factor	~1 (Adjustable from 0.8 leading to 0.8 lagging)	~1 (Adjustable from 0.8 leading to 0.8 lagging)	~1 (Adjustable from 0.8 leading to 0.8 lagging)	~1 (Adjustable from 0.8 leading to 0.8 lagging)
Max. Total Harmonic Distortion	<3%	<3%	<3%	<3%
Maximum Output Overcurrent Protection (A)	43	43	43	43
Efficiency				
Max. Efficiency	97.0%	97.1%	97.2%	97.6%
European Efficiency	93.2%	95.0%	96.0%	96.8%
Protection				
PV String Current Monitoring	Integrated			
PV Insulation Resistance Detection	Integrated			
Residual Current Monitoring	Integrated			
PV Reverse Polarity Protection	Integrated			
Anti-islanding Protection	Integrated			
AC Overcurrent Protection	Integrated			
AC Short Circuit Protection	Integrated			
AC Overvoltage Protection	Integrated			
DC Switch	Integrated			
DC Surge Protection	Type III (Type II Optional)			
AC Surge Protection	Type III (Type II Optional)			
AFCI	Optional			
Emergency Power Off	Optional			
Rapid Shutdown	Optional			
Remote Shutdown	Optional			
Power Supply at Night	Optional			
PV Power Supply	Integrated			
General Data				
Operating Temperature Range (℃)	-25 ~ +60			
Derating temperature (℃)	45			
Storage Temperature (℃)	-25~+70			
Relative Humidity	0~100%			

Technical Data	GW700-XS-30	GW1000-XS-30	GW1500-XS-30	GW2000-XS-30
Max. Operating Altitude (m)	4000			
Cooling Method	Natural Convection			
User Interface	LED, LCD,WLAN+APP			
Communication	RS485, WiFi, LAN or 4G or Bluetooth (Optional)			
Communication Protocols	ModbusRTU (SunSpec Compliant),ModBus TCP (Optional)			
Weight (kg)	4.6			
Dimension (W×H×D mm)	306×218×119			
Noise Emission (dB)	<20			
Topology	Non-isolated			
Self-consumption at Night (W)	<3			
Ingress Protection Rating	IP66			
Anti-corrosion Class	C4			
DC Connector	MC4 (4-6mm^2)			
AC Connector	Plug and Play Connector			
Environmental Category	4K4H			
Pollution Degree	III			
Overvoltage Category	DC II / AC III			
Protective Class	I			
The Decisive Voltage Class (DVC)	PV: C AC: C Com: A			
Active Anti-islanding Method	AFDPF + AQDPF *3			
Country of Manufacture (This parameter only applies to the Australian market.)	China			

*1: When the input voltage is 550-600V, the inverter will enter standby mode, and the voltage returns to 550V to enter the normal operation state.

*2: Please refer to the user manual for the MPPT Voltage Range at Nominal Power.

*3: AFDPF: Active Frequency Drift with Positive Feedback, AQDPF: Active Q Drift with Positive Feedback.

Technical Data	GW2500-XS-30	GW3000-XS-30	GW3300-XS-30	GW3300-XS-B30
Input				
Max. Input Power (W)	5,000	6,000	6,600	6,600
Max. Input Voltage (V)*1	600	600	600	600
MPPT Operating Voltage Range (V)*2	40~550	40~550	40~550	40~550
MPPT Voltage Range at Nominal Power (V)	213~480	255~480	280~480	280~480
Start-up Voltage (V)	50	50	50	50
Nominal Input Voltage (V)	360	360	360	360
Max. Input Current per MPPT (A)	16	16	16	16
Max. Short Circuit Current per MPPT (A)	25	25	25	25
Max. Backfeed Current to The Array (A)	0	0	0	0
Number of MPP Trackers	1	1	1	1
Number of Strings per MPPT	1	1	1	1
Output				
Nominal Output Power (W)	2,500	3,000	3,300	3,300
Nominal Output Apparent Power (VA)	2,500	3,000	3,300	3,300
Max. AC Active Power (W)	2,500	3,000	3,300	3,300
Max. AC Apparent Power (VA)	2,500	3,000	3,300	3,300
Nominal Power at 40℃ (W) (This parameter only applies to the Brazilian market)	2,500	3,000	3,300	3,300
Max. Power at 40℃ (Including AC Overload) (W) (This parameter only applies to the Brazilian market)	2,500	3,000	3,300	3,300
Nominal Output Voltage (V)	220/ 230/ 240,L/N/PE	220/ 230/ 240,L/N/PE	220/ 230/ 240,L/N/PE	220/ 230/ 240,L/N/PE
Output Voltage Range (V)	154~288 (according to local standard)	154~288 (according to local standard)	154~288 (according to local standard)	154~288 (according to local standard)
Nominal AC Grid Frequency (Hz)	50/60	50/60	50/60	50/60

Technical Data	GW2500-XS-30	GW3000-XS-30	GW3300-XS-30	GW3300-XS-B30
AC Grid Frequency Range (Hz)	45~55/57~63	45~55/57~63	45~55/57~63	45~55/57~63
Max. Output Current (A)	11.4	13.7	15.0	15.0
Max. Output Fault Current (Peak and Duration) (A)	43(at 2.2μs)	43(at 2.2μs)	43(at 2.2μs)	43(at 2.2μs)
Inrush Current (Peak and Duration) (A)	27.3(at 2μs)	27.3(at 2μs)	27.3(at 2μs)	27.3(at 2μs)
Nominal Output Current (A)(at 230V)	10.9	13.1	14.4	14.4
Power Factor	~1 (Adjustable from 0.8 leading to 0.8 lagging)	~1 (Adjustable from 0.8 leading to 0.8 lagging)	~1 (Adjustable from 0.8 leading to 0.8 lagging)	~1 (Adjustable from 0.8 leading to 0.8 lagging)
Max. Total Harmonic Distortion	<3%	<3%	<3%	<3%
Maximum Output Overcurrent Protection (A)	43	43	43	43
Efficiency				
Max. Efficiency	97.6%	97.6%	97.6%	97.6%
European Efficiency	97.0%	97.1%	97.1%	97.1%
Protection				
PV String Current Monitoring	Integrated			
PV Insulation Resistance Detection	Integrated			
Residual Current Monitoring	Integrated			
PV Reverse Polarity Protection	Integrated			
Anti-islanding Protection	Integrated			
AC Overcurrent Protection	Integrated			
AC Short Circuit Protection	Integrated			
AC Overvoltage Protection	Integrated			
DC Switch	Integrated			
DC Surge Protection	Type III (Type II Optional)			Type III
AC Surge Protection	Type III (Type II Optional)			Type III
AFCI	Optional			
Emergency Power Off	Optional			
Rapid Shutdown	Optional			
Remote Shutdown	Optional			
Power Supply at Night	Optional			

Technical Data	GW2500-XS-30	GW3000-XS-30	GW3300-XS-30	GW3300-XS-B30
PV Power Supply	Integrated			
General Data				
Operating Temperature Range (℃)	-25 ~ +60			
Derating temperature (℃)	45			
Storage Temperature (℃)	-25~+70			
Relative Humidity	0~100%			
Max. Operating Altitude (m)	4000			
Cooling Method	Natural Convection			
User Interface	LED, LCD,WLAN+APP			
Communication	RS485, WiFi, LAN or 4G or Bluetooth (Optional)			
Communication Protocols	Modbus-RTU (SunSpec Compliant),ModBus TCP (Optional)			
Weight (kg)	4.6			
Dimension (W×H×D mm)	306×218×119			
Noise Emission (dB)	< 20			
Topology	Non-isolated			
Self-consumption at Night (W)	< 3			
Ingress Protection Rating	IP66			
Anti-corrosion Class	C4			
DC Connector	MC4 (4-6mm^2)			
AC Connector	Plug and Play Connector			
Environmental Category	4K4H			
Pollution Degree	III			
Overvoltage Category	DC II / AC III			
Protective Class	I			
The Decisive Voltage Class (DVC)	PV: C AC: C Com: A			
Active Anti-islanding Method	AFDPF + AQDPF *3			
Country of Manufacture (This parameter is only used for the Australian market)	China			

*1: When the input voltage is 550-600V, the inverter will enter standby mode, and the voltage returns to 550V to enter the normal operation state.

*2: Please refer to the user manual for the MPPT Voltage Range at Nominal Power.

*3: AFDPF: Active Frequency Drift with Positive Feedback, AQDPF: Active Q Drift with Positive Feedback.

Technical Data	GW2K-XS-L-G30
Input	
Max. Input Power (W)	4000
Max. Input Voltage (V)*1	550
MPPT Operating Voltage Range (V)*2	40-440
MPPT Voltage Range at Nominal Power (V)	135-420
Start-up Voltage (V)	50
Nominal Input Voltage (V)	230
Max. Input Current per MPPT (A)	16
Max. Short Circuit Current per MPPT (A)	25
Max. Backfeed Current to The Array (A)	0
Number of MPP Trackers	1
Number of Strings per MPPT	1
Output	
Nominal Output Power (W)	2000
Nominal Output Apparent Power (VA)	2000
Max. AC Active Power (W)	2000
Max. AC Apparent Power (VA)	2000
Nominal Power at 40℃ (W) (This parameter only applies to the Brazilian market)	2000
Max. Power at 40℃ (Including AC Overload) (W) (This parameter only applies to the Brazilian market)	2000
Nominal Output Voltage (V)	127, L/N/PE
Output Voltage Range (V)	114-139
Nominal AC Grid Frequency (Hz)	60
AC Grid Frequency Range (Hz)	45~55/57~63
Max. Output Current (A)	15.7
Max. Output Fault Current (Peak and Duration) (A)	43(at 2.2μs)
Inrush Current (Peak and Duration) (A)	27.3(at 2μs)
Nominal Output Current (A)(at 230V)	15.7
Power Factor	~1 (Adjustable from 0.8 leading to 0.8 lagging)
Max. Total Harmonic Distortion	<3%
Maximum Output Overcurrent Protection (A)	43
Efficiency	
Max. Efficiency	96%
European Efficiency	95.5%
Protection	

Technical Data	GW2K-XS-L-G30
PV String Current Monitoring	Integrated
PV Insulation Resistance Detection	Integrated
Residual Current Monitoring	Integrated
PV Reverse Polarity Protection	Integrated
Anti-islanding Protection	Integrated
AC Overcurrent Protection	Integrated
AC Short Circuit Protection	Integrated
AC Overvoltage Protection	Integrated
DC Switch	Integrated
DC Surge Protection	Type II
AC Surge Protection	Type III (Type II Optional)
AFCI	Integrated
Emergency Power Off	Optional
Rapid Shutdown	Optional
Remote Shutdown	Optional
Power Supply at Night	Optional
PV Power Supply	Integrated
General Data	
Operating Temperature Range (℃)	-25 ~ +60
Derating temperature (℃)	45
Storage Temperature (℃)	-25~+70
Relative Humidity	0~100%
Max. Operating Altitude (m)	4000
Cooling Method	Natural Convection
User Interface	LED, LCD,WLAN+APP
Communication	RS485, WiFi, LAN or 4G or Bluetooth (Optional)
Communication Protocols	Modbus-RTU (SunSpec Compliant),ModBus TCP (Optional)
Weight (kg)	4.6
Dimension (W×H×D mm)	306×218×119
Noise Emission (dB)	< 20
Topology	Non-isolated
Self-consumption at Night (W)	< 3
Ingress Protection Rating	IP66
Anti-corrosion Class	C4
DC Connector	MC4 (4-6mm^2)
AC Connector	Plug and Play Connector
Environmental Category	4K4H

Technical Data	GW2K-XS-L-G30
Pollution Degree	III
Overvoltage Category	DC II / AC III
Protective Class	I
The Decisive Voltage Class (DVC)	PV: C AC: C Com: A
Active Anti-islanding Method	AFDPF + AQDPF *3
Country of Manufacture (This parameter is only used for the Australian market)	China

*1: When the input voltage is 550-600V, the inverter will enter standby mode, and the voltage returns to 550V to enter the normal operation state.
*2: Please refer to the user manual for the MPPT Voltage Range at Nominal Power.
*3: AFDPF: Active Frequency Drift with Positive Feedback, AQDPF: Active Q Drift with Positive Feedback.

11 Term Explanation

Overvoltage Category Definition

Category I: Applies to equipment connected to a circuit where measures have been taken to reduce transient overvoltage to a low level.

Category II: Applies to equipment not permanently connected to the installation. Examples are appliances, portables tools and other plug-connected equipment.

Category III: Applies to a fixed equipment downstream, including the main distribution board. Examples are switch gear and other equipment in an industrial installation.

Category IV: Applies to equipment permanently connected at the origin of an installation (upstream of the main distribution board). Examples are electricity meters, primary over-current protection equipment and other equipment connected directly to outdoor open lines.

Parameters	Level		
	3K3	4K2	4K4H
Moisture Parameters	0~+40℃	-33~+40℃	-33~+40℃
Temperature Range	5% - 85%	15% - 100%	4% - 100%

Environment category definition

Outdoor: Ambient Temperature: -25~+60℃, applied to Pollution Degree 3 environment.

Indoor Unconditioned: Ambient Temperature: -25~+40℃, applied to Pollution Degree 3 environment.

Indoor conditioned: Ambient Temperature: 0~+40℃, applied to Pollution Degree 2 environment.

Pollution degree definition

Pollution Degree I: No pollution or only dry, non-conductive pollution occurs. The pollution has no influence.

Pollution Degree II: Normally only non-conductive pollution occurs. Occasionally, however, a temporary conductivity caused by condensation must be expected.

Pollution Degree III: Conductive pollution occurs, or dry. non-conductive pollution occurs, which becomes conductive due to condensation, which is expected.

Pollution Degree IV: Persistent conductive pollution occurs, for example, the pollution caused by conductive dust, rain or snow.

Official Website

GoodWe Technologies Co.,Ltd.

No. 90 Zijin Rd., New District, Suzhou, 215011, China

www.goodwe.com

service@goodwe.com

Contact Information