GOODWE

ES Uniq 8.0-12kW Residential Smart Inverter Solutions Guide

V1.7-2026-03-20

⚠ WARNING

The information in this quick guide is subject to change due to product updates or other reasons. This guide cannot replace the product labels or the safety precautions in the user manual unless otherwise specified. All descriptions in the manual are for guidance only.

Scenario

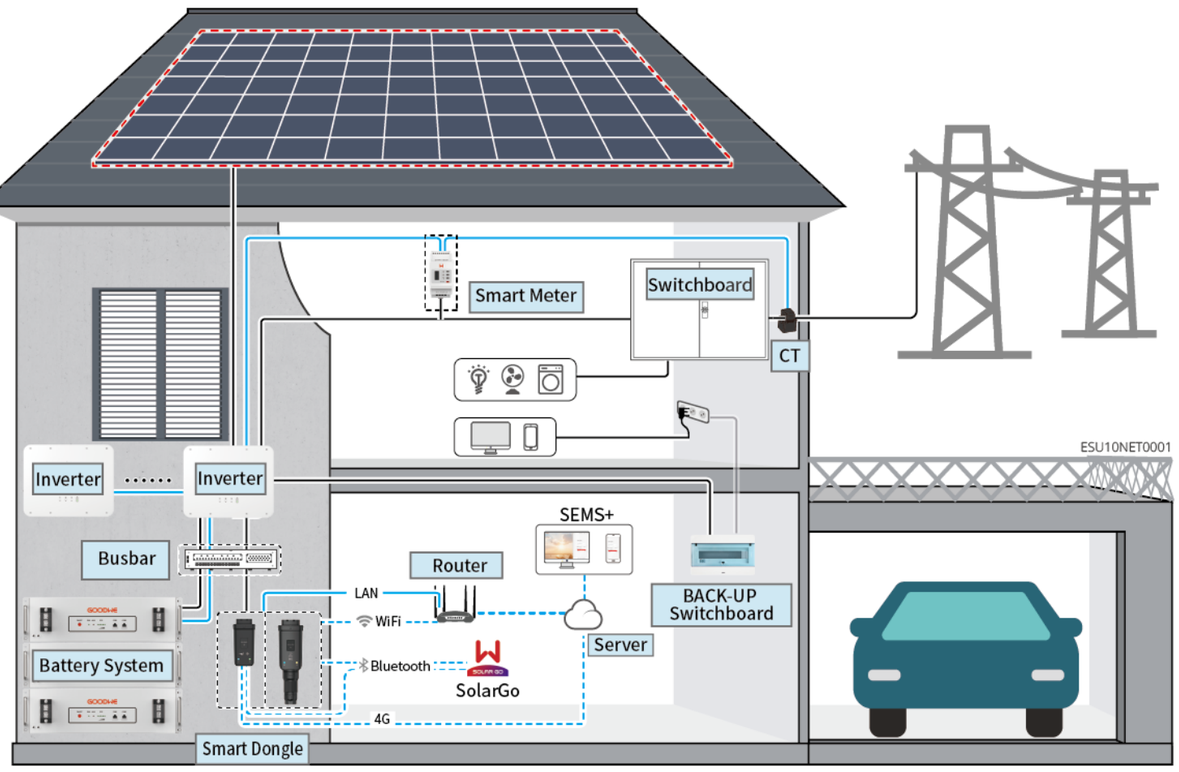

Device	Model	Description
Inverter	GW8000-ES-C10 GW10K-ES-C10 GW12K-ES-C10	• When only one inverter is used in the system, it is supported to connect generator. • When multiple inverters are used in the system, it is not supported to connect generator or large loads; a maximum of 6 inverters are supported to form a parallel system, and the Ezlink3000 is required in the parallel system. • Requirements for parallel: • The software version of all inverters in the system is the same. • The ARM software version of the inverter is 15.494 and above. • The DSP software version of the inverter is 05.13 and above. • All inverters in the parallel system are of the same model number and have the same appearance and ports.
Battery system	LX A5.0-10	Battery systems of different models cannot be mixed and used together. Parallel cluster expansion is temporarily not supported between different models. For the same model, parallel cluster expansion is allowed within one year of purchase and use by the customer, and is not allowed after one year. • LX A5.0-10: Supports up to 15 units in parallel cluster in the same system. • LX A5.0-30: Supports up to 30 units in parallel cluster in the same system
	LX A5.0-30	
	LX U5.4-L	• The system supports a maximum of 6 parallel clusters. • Battery system does not support expansio.
	LX U5.4-20	
	LX U5.0-30	• Supports up to 30 units in parallel cluster in the same system. • Parallel cluster expansion is temporarily not supported between different models. For the same model, parallel cluster expansion is allowed within one year of purchase and use by the customer, and is not allowed after one year.

	GW14.3-BAT-LV-G10	• Parallel cluster expansion is temporarily not supported between different models. For the same model, parallel cluster expansion is allowed within one year of purchase and use by the customer, and is not allowed after one year.
		• Supports up to 30 units in parallel cluster in the same system:
		  • Products with SN code 25C and later default to supporting 30 units in parallel cluster.
		  • For products before 25C, if 30 units parallel cluster is required, please contact GoodWe aftersales service center to upgrade the firmware version.
		  • To view the product SN code, refer to SN Code Meaning.

	GW16.1-BAT-LVG10	• Supports up to 30 units in parallel cluster in the same system. • Parallel cluster expansion is temporarily not supported between different models. For the same model, parallel cluster expansion is allowed within one year of purchase and use by the customer, and is not allowed after one year.
	Lead-acid Battery	• Supports connection to lead-acid batteries of AGM, GEL, and Flooded types. • The number of batteries that can be connected in series is calculated based on the voltage of lead-acid batteries, and the total voltage of batteries connected in series is not allowed to exceed 60V.

Device	Model	Description
Busbar	BCB-11-WW-0 BCB-22-WW-0 BCB-32-WW-0 BCB-33-WW-0 (Purchase from GoodWe)	• Please select the busbar according to the charging/discharging capacity of the inverter, the load size, and the charging/discharging capacity of the battery in the system. • BCB-11-WW-0: » Used with LX A5.0-10, the battery system supports a maximum working current of 360A, working power of 18kW, and can connect to a maximum of 3 inverters, and 6 batteries. • BCB-22-WW-0: » Used with LX A5.0-10, the battery system supports a maximum working current of 720A, working power of 36kW, and can connect to a maximum of 6 inverters, and 12 batteries. » Used with LX A5.0-30, the battery system supports a maximum working current of 720A, working power of 36kW, and can connect to a maximum of 6 inverters, and 6 batteries. • BCB-32-WW-0: » Used with LX A5.0-10, the battery system supports a maximum working current of 720A, working power of 36kW, and can connect to a maximum of 6 inverters, and 15 batteries. » Used with LX A5.0-30, the battery system supports a maximum working current of 720A, working power of 36kW, and can connect to a maximum of 6 inverters, and 15 batteries. » Used with LX U5.0-30, the battery system supports a maximum working current of 720A, working power of 36kW, and can connect to a maximum of 6 inverters, and 8 batteries. » Used with GW14.3-BAT-LV-G10, the battery system supports a maximum working current of 720A, working power of 36kW, and can be connected to a maximum of 6 inverters, and 15 batteries. » When used with GW16.1-BAT-LV-G10, the battery system supports up to 720A working current, 36kW working power, maximum connection of 6 inverters, and 15 batteries. • BCB-33-WW-0: » Used with LX U5.0-30, the battery system supports a maximum working current of 720A, working power of 36kW, and can be connected to a maximum of 6 inverters, and 15 batteries. When the number of batteries exceeds 8, two 600A fuses need to be connected in parallel. • Others: Please prepare busbar based on actual system power and current.
Smart Meter	• Built-in Smart Meter (Standard) • GMK110 (optional) • GM330 (purchase from GoodWe)	• Built-in Smart Meter: When the number of parallel inverters is ≤2 and the length of CT cable is ≤10 meters, the built-in meter can be used. Built-in smart meter: 10-meter wire CT, default CT ratio: 120A/40mA • GMK110: When the length of the built-in CT cable of the inverter is not enough for connection to the switchboard, please connect an external GMK110 smart meter. CT is not supported for changing to other type, CT ratio: 120A/40mA. • CM330: Supports purchasing from GOODWE or third-party, CT ratio requirement: nA/5A • nA: CT primary input current, n ranges from 200 to 5000. • 5A: CT Secondary input current.

Device	Model	Description
Smart Dongle	• WiFi/LAN Kit-20 (Standard) • 4G Kit-CN-G20 (Only for China) • 4G Kit-CN-G21 (Only for China) • Ezlink3000 (purchase from GoodWe)	• Please use the WiFi/LAN Kit-20, 4G Kit-CN-G20, 4G Kit-CN-G21 modules in single inverter system. • In parallel system, the EzLink3000 must be connected to the master inverter. Do not connect any smart dongle to slave inverter. Ezlink3000 requires a firmware version of 05 or above.
Heavy Load	-	Supports SG Ready, large load specification requirements: 1. Large load total power < GEN port maximum output power 2. Large load power + BACK-UP power < AC maximum input power (grid)
Generator	-	Generator rated voltage meets inverter GEN port rated voltage

Microgrid Scenario

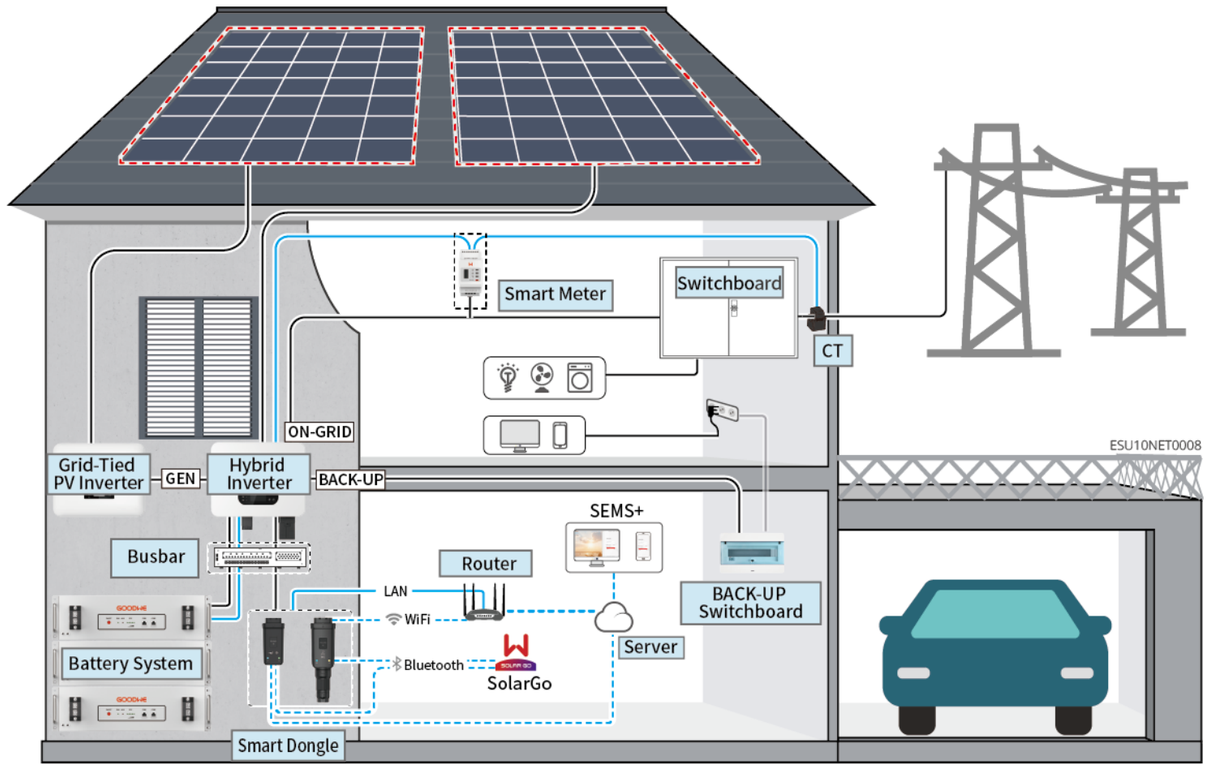

Device	Model	Description
Inverter	GW8000-ES-C10 GW10K-ES-C10 GW12K-ES-C10	• In the microgrid system, parallelization is not supported by the inverter, and only a single inverter can be supported to use in the system. • Requirements for parallel: • The ARM software version of the inverter is 15.494 and above. • The DSP software version of the inverter is 05.13 and above. • Some models do not support microgrid functionality.
Battery system	LX A5.0-10	Battery systems of different models cannot be mixed and used together. Parallel cluster expansion is temporarily not supported between different models. For the same model, parallel cluster expansion is allowed within one year of purchase and use by the customer, and is not allowed after one year. • LX A5.0-10: Supports up to 15 units in parallel cluster in the same system. • LX A5.0-30: Supports up to 30 units in parallel cluster in the same system
	LX A5.0-30	
	LX U5.4-L	• The system supports a maximum of 6 parallel clusters. • Battery system does not support expansio.
	LX U5.4-20	
	LX U5.0-30	• Supports up to 30 units in parallel cluster in the same system. • Parallel cluster expansion is temporarily not supported between different models. For the same model, parallel cluster expansion is allowed within one year of purchase and use by the customer, and is not allowed after one year.

	GW14.3-BAT-LV-G10	• Parallel cluster expansion is temporarily not supported between different models. For the same model, parallel cluster expansion is allowed within one year of purchase and use by the customer, and is not allowed after one year.
		• Supports up to 30 units in parallel cluster in the same system:
		  • Products with SN code 25C and later default to supporting 30 units in parallel cluster.
		  • For products before 25C, if 30 units parallel cluster is required, please contact GoodWe aftersales service center to upgrade the firmware version.
		  • To view the product SN code, refer to SN Code Meaning.

	GW16.1-BAT-LVG10	• Supports up to 30 units in parallel cluster in the same system. • Parallel cluster expansion is temporarily not supported between different models. For the same model, parallel cluster expansion is allowed within one year of purchase and use by the customer, and is not allowed after one year.
	Lead-acid Battery	• Supports connection to lead-acid batteries of AGM, GEL, and Flooded types. • The number of batteries that can be connected in series is calculated based on the voltage of lead-acid batteries, and the total voltage of batteries connected in series is not allowed to exceed 60V.

Device	Model	Description

Busbar	BCB-11-WW-0
	BCB-22-WW-0
	BCB-32-WW-0
	BCB-33-WW-0
	(Purchase from GoodWe)
		• Please select the busbar according to the charging/discharging capacity of the inverter, the load size, and the charging/discharging capacity of the battery in the system.
		  • BCB-11-WW-0:
		  » Used with LX A5.0-10, the battery system supports a maximum working current of 360A, working power of 18kW, and can connect to a maximum of 3 inverters, and 6 batteries.
		  • BCB-22-WW-0:
		  » Used with LX A5.0-10, the battery system supports a maximum working current of 720A, working power of 36kW, and can connect to a maximum of 6 inverters, and 12 batteries.
		  » Used with LX A5.0-30, the battery system supports a maximum working current of 720A, working power of 36kW, and can connect to a maximum of 6 inverters, and 6 batteries.
		  • BCB-32-WW-0:
		  » Used with LX A5.0-10, the battery system supports a maximum working current of 720A, working power of 36kW, and can connect to a maximum of 6 inverters, and 15 batteries.
		  » Used with LX A5.0-30, the battery system supports a maximum working current of 720A, working power of 36kW, and can connect to a maximum of 6 inverters, and 15 batteries.
		  » Used with LX U5.0-30, the battery system supports a maximum working current of 720A, working power of 36kW, and can connect to a maximum of 6 inverters, and 8 batteries.
		  » Used with GW14.3-BAT-LV-G10, the battery system supports a maximum working current of 720A, working power of 36kW, and can be connected to a maximum of 6 inverters, and 15 batteries.
		  » When used with GW16.1-BAT-LV-G10, the battery system supports up to 720A working current, 36kW working power, maximum connection of 6 inverters, and 15 batteries.
		  • BCB-33-WW-0:
		  » Used with LX U5.0-30, the battery system supports a maximum working current of 720A, working power of 36kW, and can be connected to a maximum of 6 inverters, and 15 batteries. When the number of batteries exceeds 8, two 600A fuses need to be connected in parallel.
		  • Others: Please prepare busbar based on actual system power and current.

Smart Meter	• Built-in Smart Meter (Standard)
	• GMK110 (optional)
	• GM330 (purchase from GoodWe)
		• Built-in Smart Meter: When the number of parallel inverters is ≤2 and the length of CT cable is ≤10 meters, the built-in meter can be used. Built-in smart meter: 10-meter wire CT, default CT ratio: 120A/40mA
		• GMK110: When the length of the built-in CT cable of the inverter is not enough for connection to the switchboard, please connect an external GMK110 smart meter. CT is not supported for changing to other type, CT ratio: 120A/40mA.
		• CM330: Supports purchasing from GOODWE or third-party, CT ratio requirement: nA/5A
		  • nA: CT primary input current, n ranges from 200 to 5000.
		  • 5A: CT Secondary input current.

Device	Model	Description
Smart Dongle	• WiFi/LAN Kit-20 (Standard) • 4G Kit-CN-G20 (Only for China) • 4G Kit-CN-G21 (Only for China) • Ezlink3000 (purchase from GoodWe)	• Please use the WiFi/LAN Kit-20, 4G Kit-CN-G20, 4G Kit-CN-G21 modules in single inverter system.
Grid-Tied PV Inverter	-	• It's recommended to use grid-tied PV inverter sold in GOODWE, and is supported to use the third-party grid-tied PV inverter. • When the microgrid system is in grid-tied mode, if power limitation control is required, make sure: » The hybrid inverter should be set in the grid-tied power limitationinterface of the SolarGo APP, and the grid-tied invertershould be set according to the actual tools used. » In order to ensure that the grid-tied inverters can continue to generate power, the output power of the hybrid inverters must be adjusted in the microgrid mode interface of the SolarGo APP. • Note: The output power control precision of different grid-tied inverters varies. Please set the grid-tied power limit control parameter value according to the actual situation.

02 Power On/Off

Single inverter system

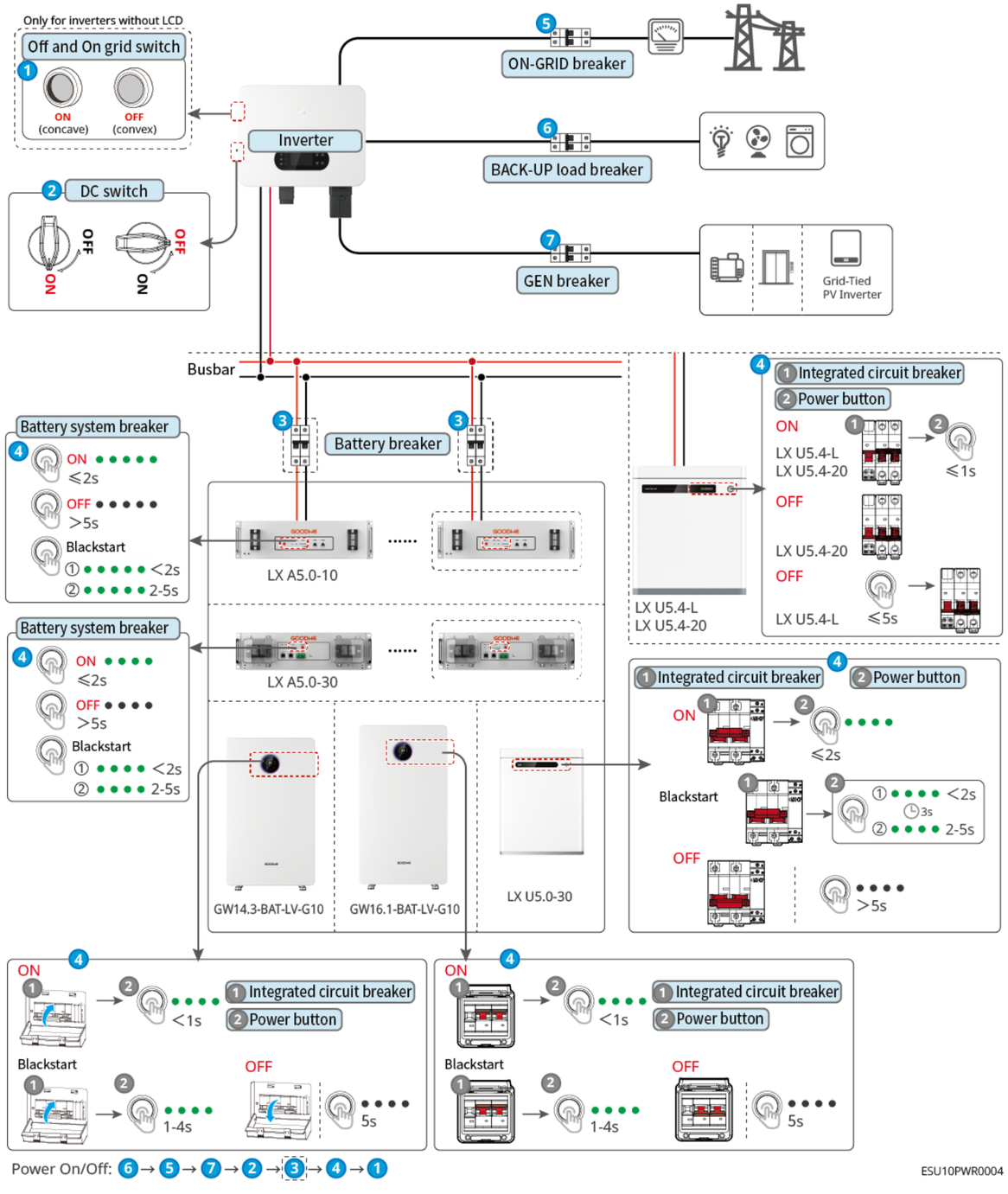

Multi-inverter system

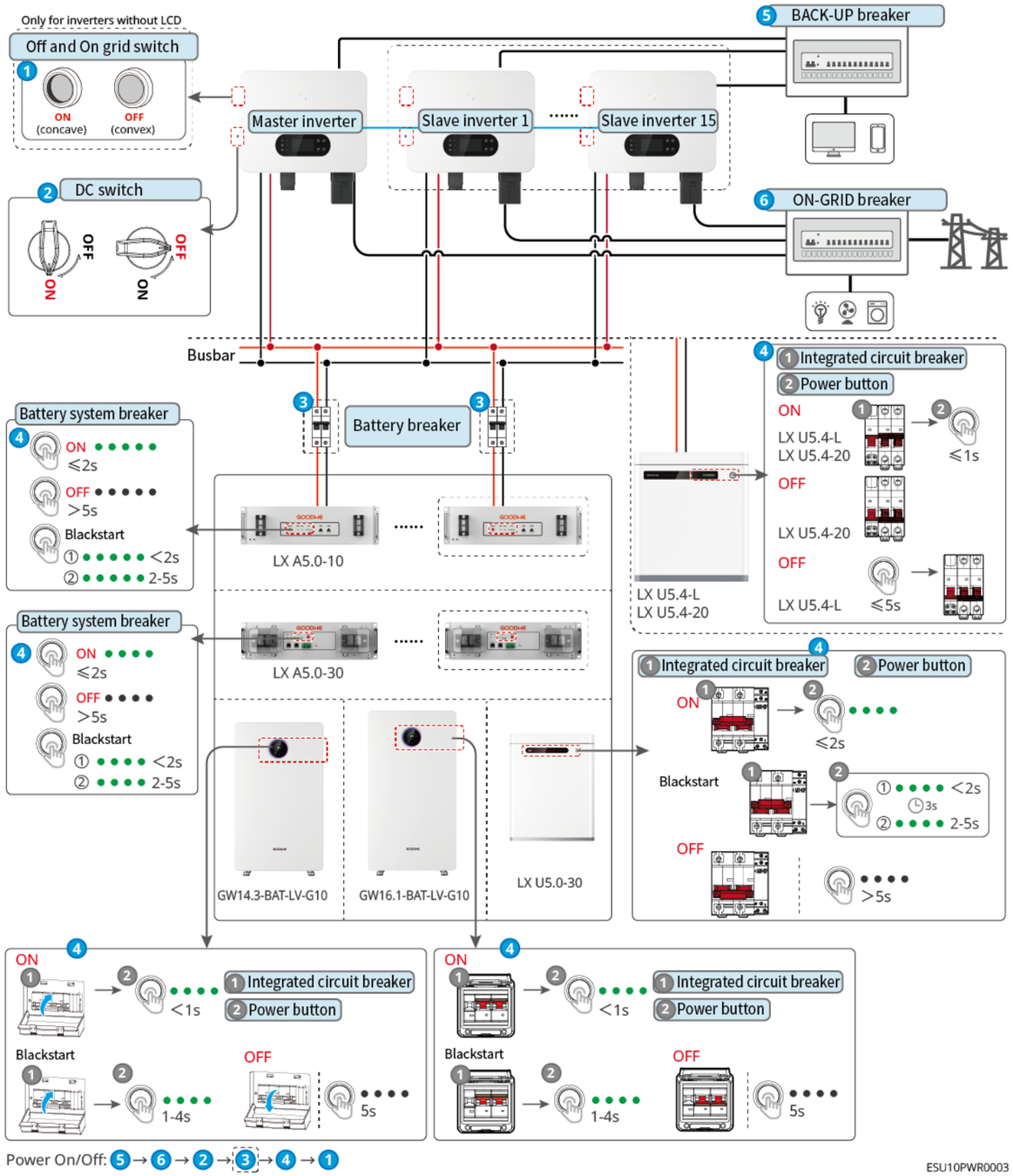

Steps	❶ Installation	❷ PE	❸ PV	❹ Battery	❺ AC	❻ COM	❼ Communication module
Inverter	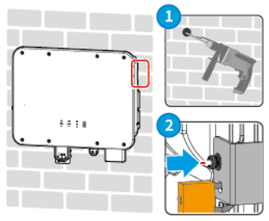	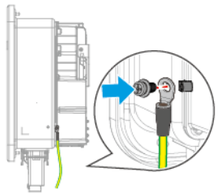	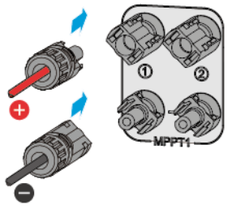	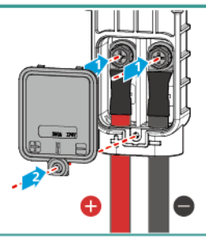	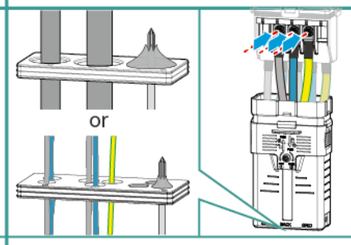	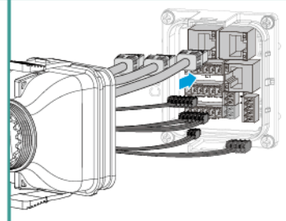	4G Kit-CN-G20 4G Kit-CN-G21 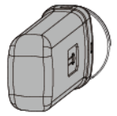 WiFi/LAN Kit-20 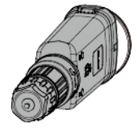 Ezlink3000 
Tools	❶ D: 80mm ϕ: 8mm  ❷ M5 1.5-2N·m 	M5 1.5-2N·m 	Recommend: PV-CZM-61100 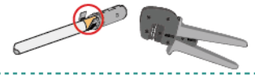 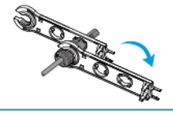	❶ M10 3.9-4.1N·m  ❷ M4 0.8N·m 	M5 1.9-2.1N·m 	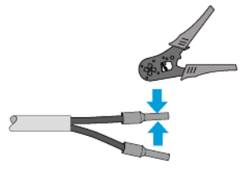	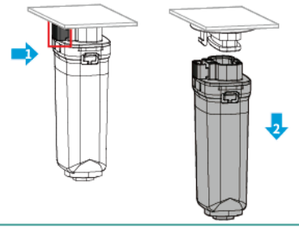

Steps	❶ Installation	❷ PE	❸ Battery	❹ COM
Battery	LX A5.0-10 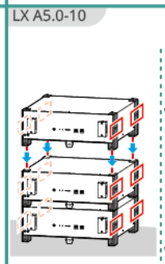 LX A5.0-30 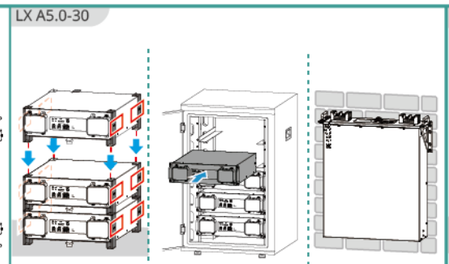 GW14.3-BAT-LV-G10 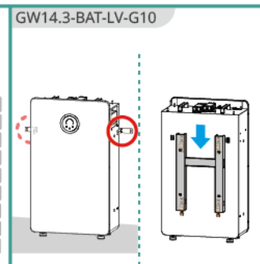 LX U5.4-L/LX U5.4-20 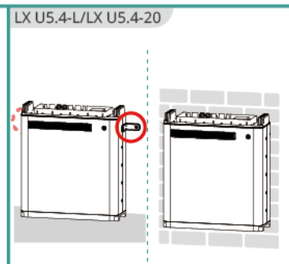 LXU 5.0-30 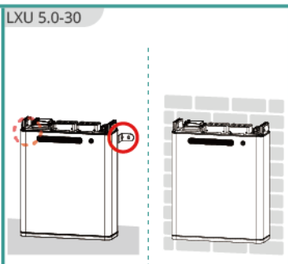	LX A5.0-10 LX A5.0-30 ❶ LX U5.4-L LX U5.4-20 ❷ LXU 5.0-30 ❸ GW14.3-BAT-LV-G10 ❹ 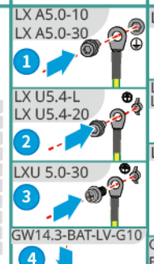	LX A5.0-10 ❶ LX A5.0-30 LXU 5.0-30 ❷ LX U5.4-L/LX U5.4-20 ❸ GW14.3-BAT-LV-G10 ❹ 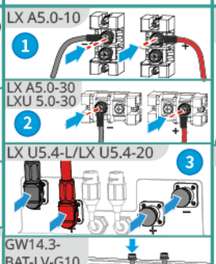	LX A5.0-10 /LX A5.0-30 GW14.3-BAT-LV-G10 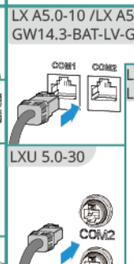 LX U5.4-L LX U5.4-20 LXU 5.0-30
Tools	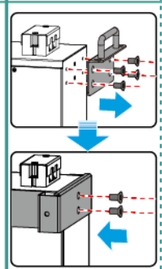 M4 1.4N·m 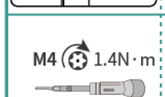 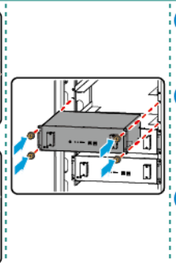 M6 6N·m  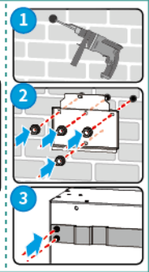 ❷ M6 6N·m 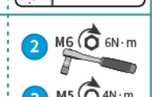 ❸ M5 4N·m 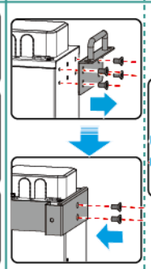 M4 1.4N·m 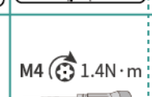 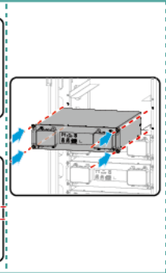 M6 6N·m  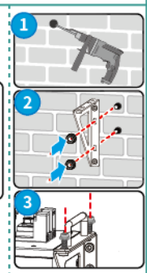 ❷ M6 6N·m ❸ M4 1.4N·m ❶ M5 4N·m ❸ ST5.5 4N·m ❷ M10 15N·m ❸ M5 4N·m ❶a D: 80mm ϕ: 8mm ❶b D: 65mm ϕ: 13mm ❷a ST5.5 *70 10N·m ❷b M10 10N·m ❶ ❸ M5 2N·m	❶ M5 4N·m ❷ M5 2N·m ❸ M5 4N·m ❹ M5 4N·m	❶ M6 6N·m ❷ M8 12N·m ❸ Recommend: YQK-70 ❹ M10 15N·m	

ESU10INT0003

Steps	❶ Installation	❷ PE	❸ Battery	❹ COM
Battery GW16.1-BAT-LV-G10	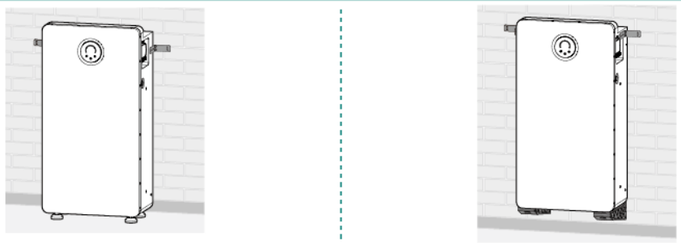	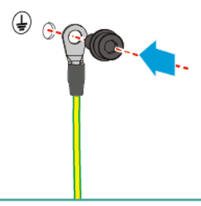	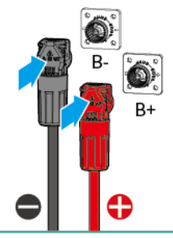	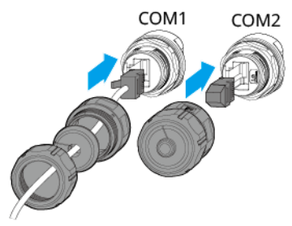
Tools	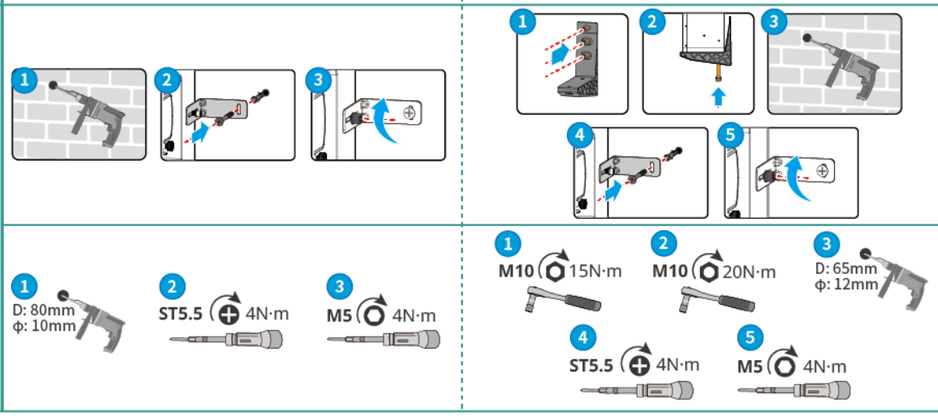		-	-

Steps	❶ Installation	❷ Cable Connections	❸ Power	❹ Commissioning
Smart meter	GMK110 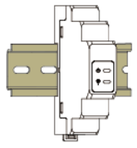 GM330 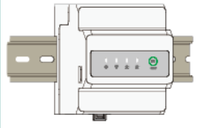	GMK110 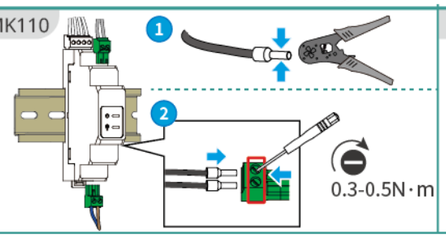 GM330 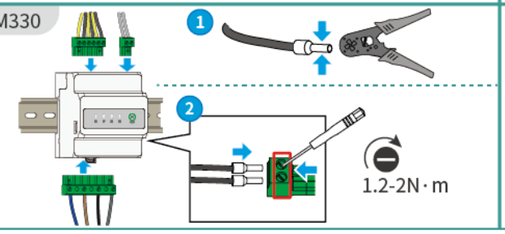	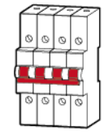 AC breaker	 SolarGo APP  SEMS+ App or SEMS+ WEB

ESU10INT0016

Steps	❶ Installation	❷ PE	❸ PV	❹ Battery	❺ AC	❻ COM	❼ Communication module
Inverter	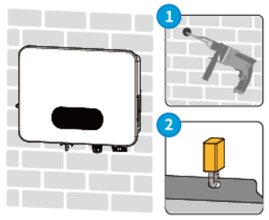	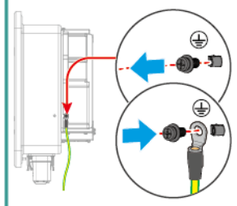	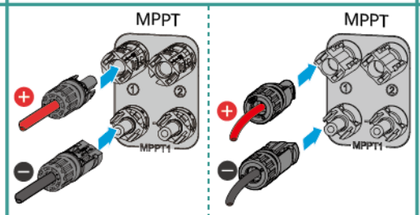	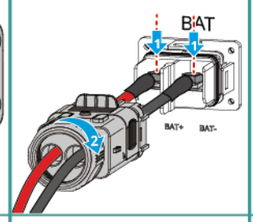	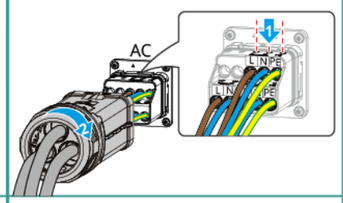	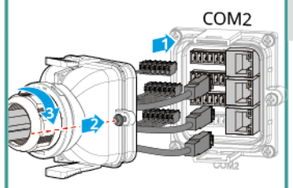	4G Kit-CN-G20 4G Kit-CN-G21 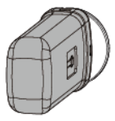 WiFi/LAN Kit-20  Ezlink3000 
Tools	❶ D: 80mm ϕ: 8mm 	M5 1.5-2N·m 	Recommend: A-2546B  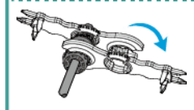 Recommend: PV-CZM-61100 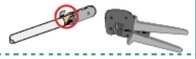 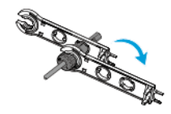	❶ M8 5.5-6.6N·m  ❷ 52mm 6-7N·m 	❶ M5 2.4-2.6N·m ❷ 71mm 4N·m 	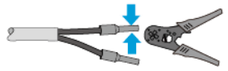 ❷ M4 1.5N·m  ❸ 40mm 5-6N·m 	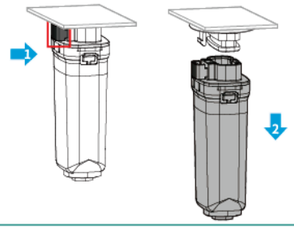

Steps	❶ Installation	❷ PE	❸ Battery	❹ COM
Battery	LX A5.0-10 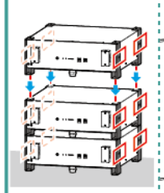 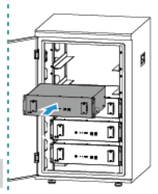 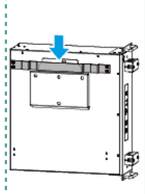 LX A5.0-30 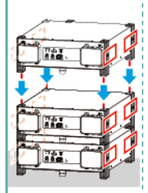 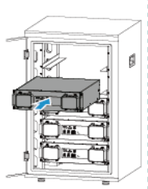 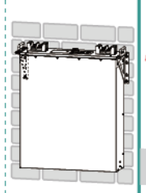 GW14.3-BAT-LV-G10 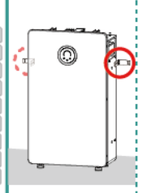 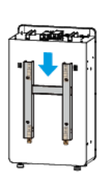 LX U5.4-L/LX U5.4-20 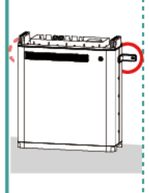 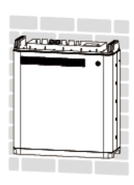 LXU 5.0-30 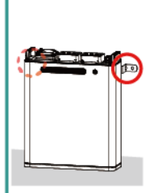 	LX A5.0-10 LX A5.0-30 ❶ LX U5.4-L LX U5.4-20 ❷ LXU 5.0-30 ❸ GW14.3-BAT-LV-G10 ❹ 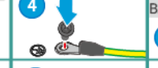	LX A5.0-10 ❶ 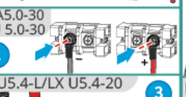 LX A5.0-30 LXU 5.0-30 ❷  LX U5.4-L/LX U5.4-20 ❸ 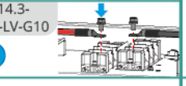 GW14.3-BAT-LV-G10 ❹ 	LX A5.0-10 /LX A5.0-30 GW14.3-BAT-LV-G10 LX U5.4-L LX U5.4-20 LXU 5.0-30
Tools	 			

ESU10INT0010

Steps	❶ Installation	❷ PE	❸ Battery	❹ COM
Battery GW16.1-BAT-LV-G10	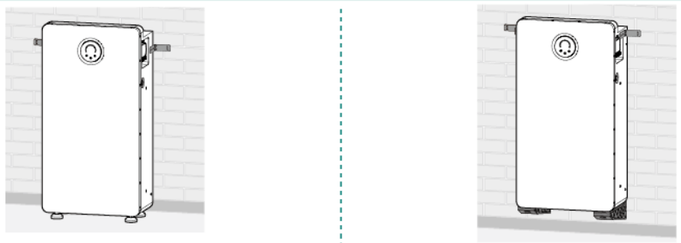	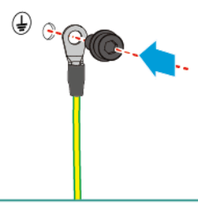	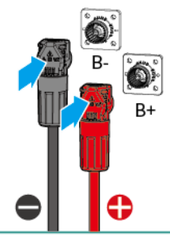	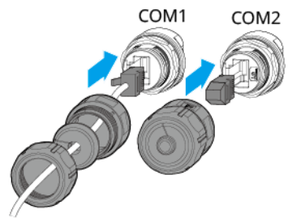
Tools	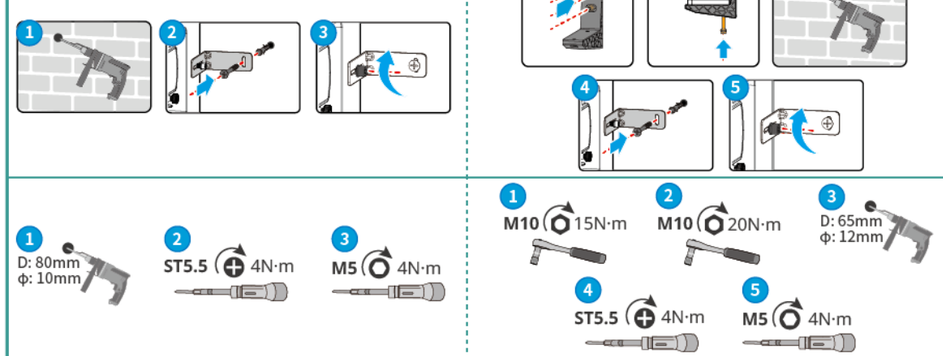		-	-

Steps	❶ Installation	❷ Cable Connections	❸ Power	❹ Commissioning
Smart meter	GMK110 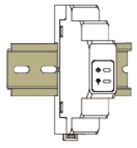 GM330 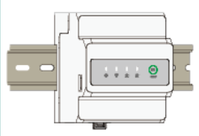	GMK110 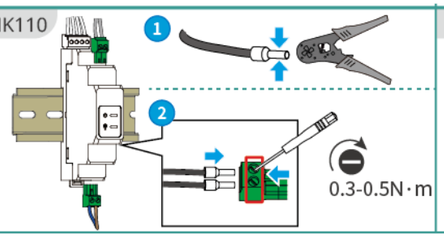 GM330 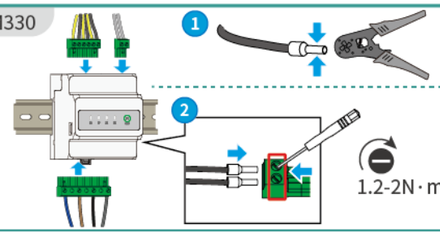	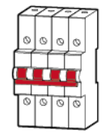 AC breaker	 SolarGo APP  SEMS+ App or SEMS+ WEB

ESU10INT0016

04 Wiring Diagram ES Uniq 8-12kW (single) + LX A5.0-10/LX A5.0-30/LX U5.4-L/LX U5.4-20/LX U5.0-30/GW14.3-BAT-LV-G10/GW16.1-BAT-LV-G10/Lead-acid battery + Builit-in smart meter + WiFi/LAN Kit-20

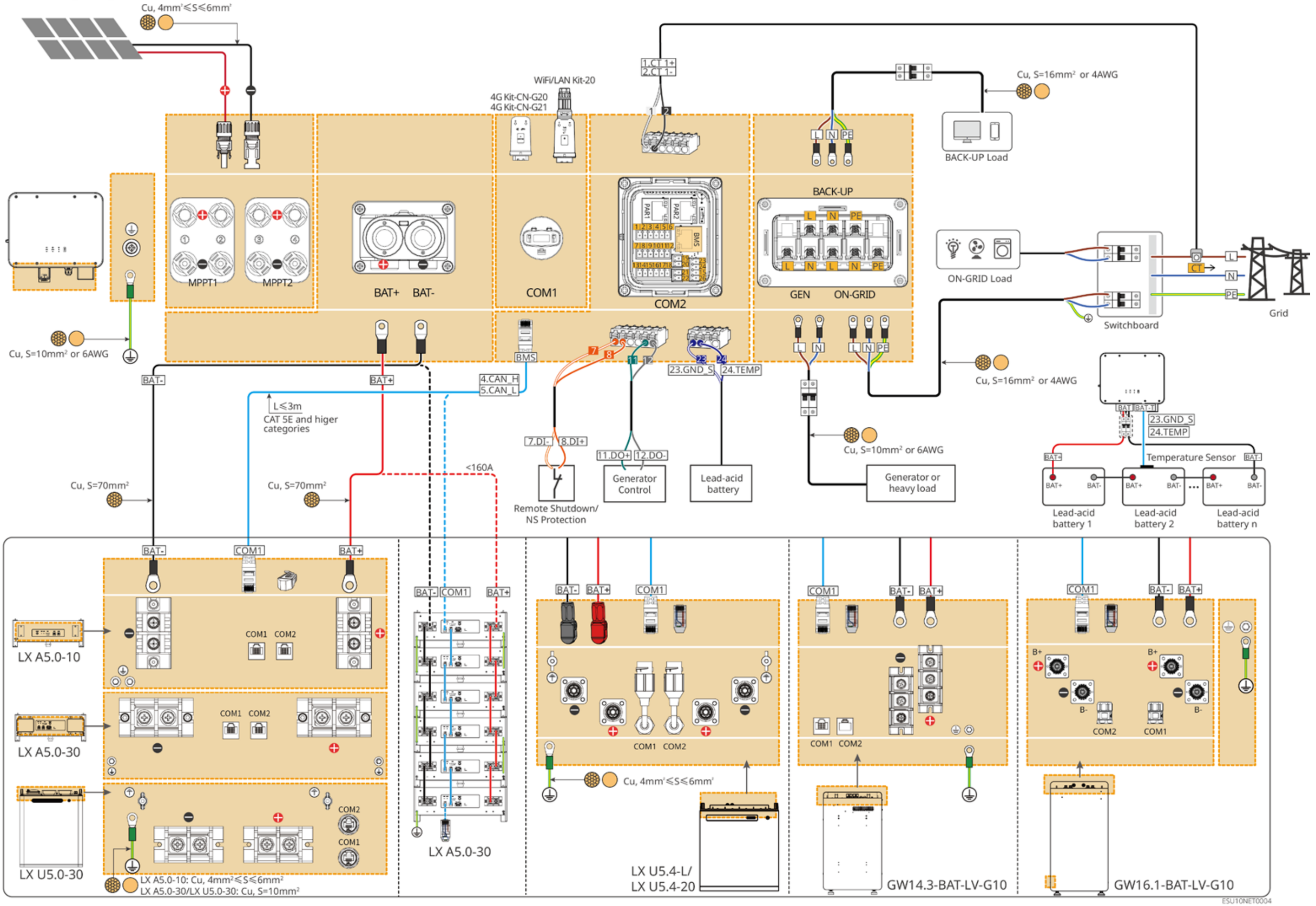

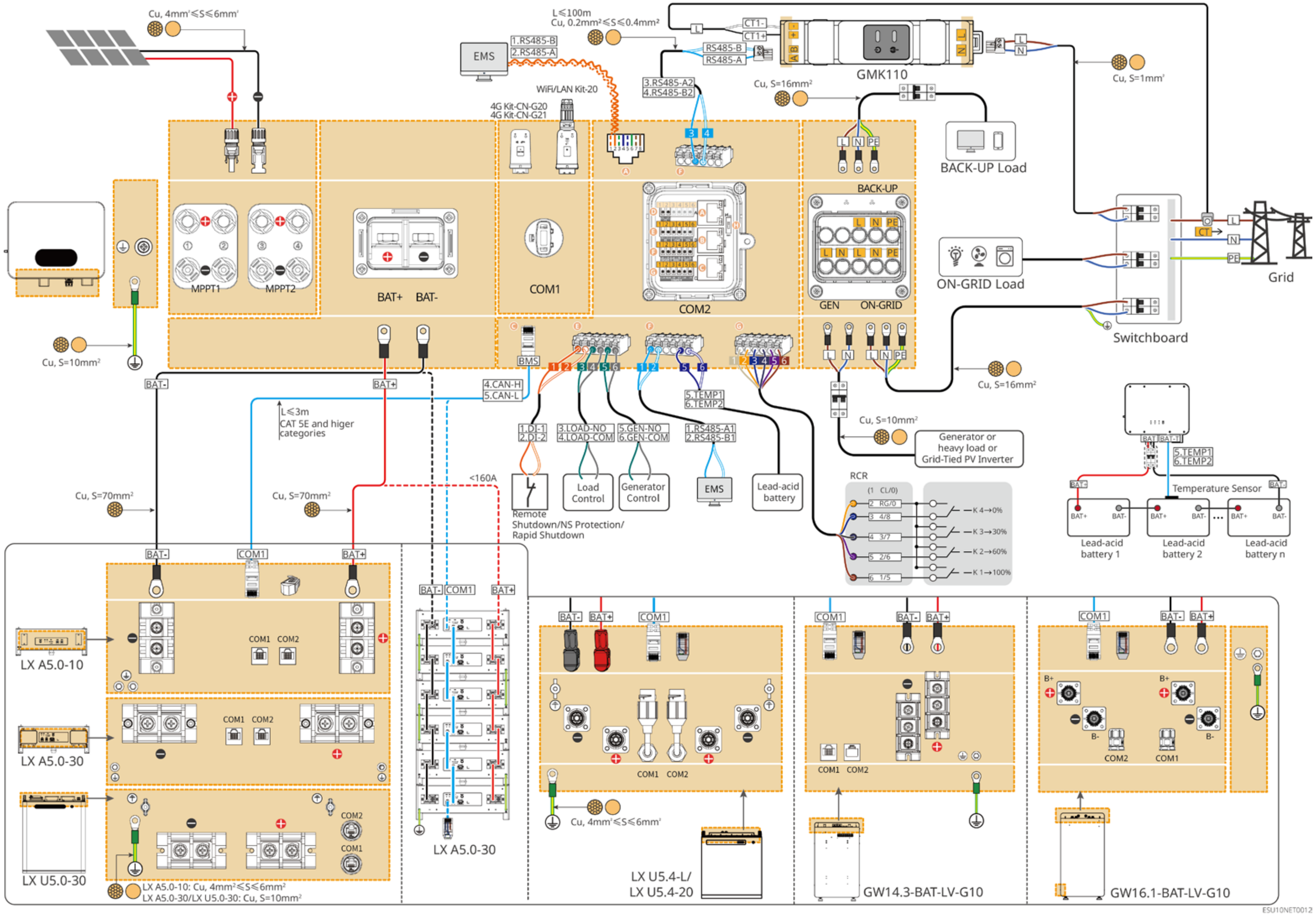
Cu, 4mm²≤S≤6mm²
L≤100m
Cu, 0.2mm²≤S≤0.4mm²
EMS
1.RS485-B
2.RS485-A
WiFi/LAN Kit-20
4G Kit-CN-G20
4G Kit-CN-G21
3.RS485-A2
4.RS485-B2
CT1-
CT1+
RS485-B
RS485-A
GMK110
Cu, S=16mm²
Cu, S=1mm²
BACK-UP Load
BACK-UP
GEN
ON-GRID
ON-GRID Load
Grid
Switchboard
MPPT1
MPPT2
BAT+
BAT-
COM1
COM2
BMS
Cu, S=10mm²
BAT-
BAT+
4.CAN-H
5.CAN-L
L≤3m
CAT 5E and higer categories
5.TEMP1
6.TEMP2
1.DI-1
2.DI-2
3.LOAD-NO
4.LOAD-COM
5.GEN-NO
6.GEN-COM
1.RS485-A1
2.RS485-B1
Cu, S=16mm²
Cu, S=10mm²
Generator or heavy load or Grid-Tied PV Inverter
RCR
(1 CL/0)
2 RG/0
3 4/8
4 3/7
5 2/6
6 1/5
K 4→0%
K 3→30%
K 2→60%
K 1→100%
<160A
Cu, S=70mm²
Cu, S=70mm²
Remote Shutdown/NS Protection/ Rapid Shutdown
Load Control
Generator Control
EMS
Lead-acid battery
Temperature Sensor
Lead-acid battery 1
Lead-acid battery 2
Lead-acid battery n
LX A5.0-10
LX A5.0-30
LX U5.0-30
LX A5.0-10: Cu, 4mm²≤S≤6mm²
LX A5.0-30/LX U5.0-30: Cu, S=10mm²
LX A5.0-30
Cu, 4mm²≤S≤6mm²
LX U5.4-L/
LX U5.4-20
GW14.3-BAT-LV-G10
GW16.1-BAT-LV-G10
ESU10NET0012

ES Uniq 8-12kW (single) + LX A5.0-10/LX A5.0-30/LX U5.4-L/LX U5.4-20/LX U5.0-30/GW14.3-BAT-LV-G10/GW16.1-BAT-LV-G10/Lead-acid battery + GMK110 + WiFi-LAN Kit-20

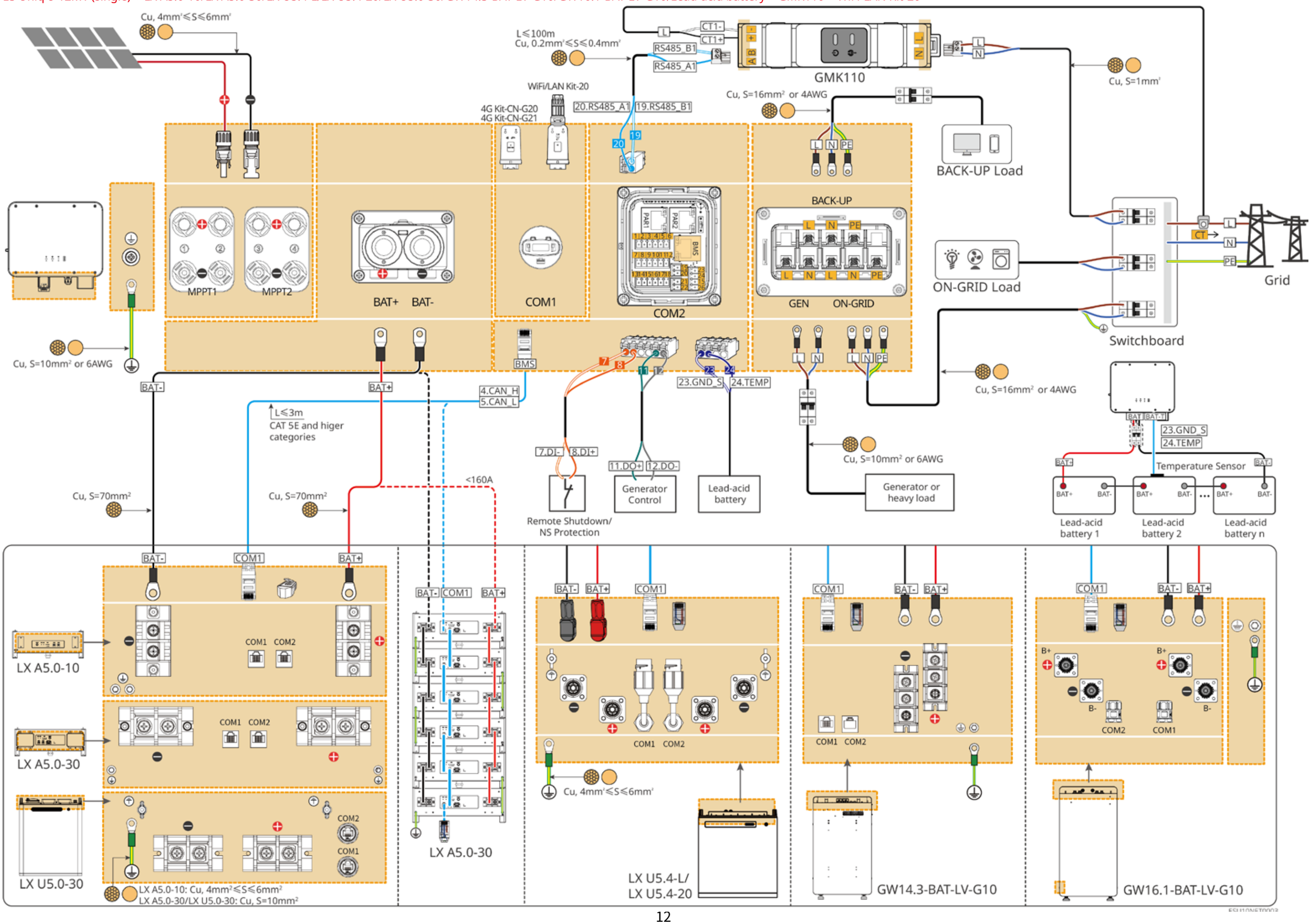

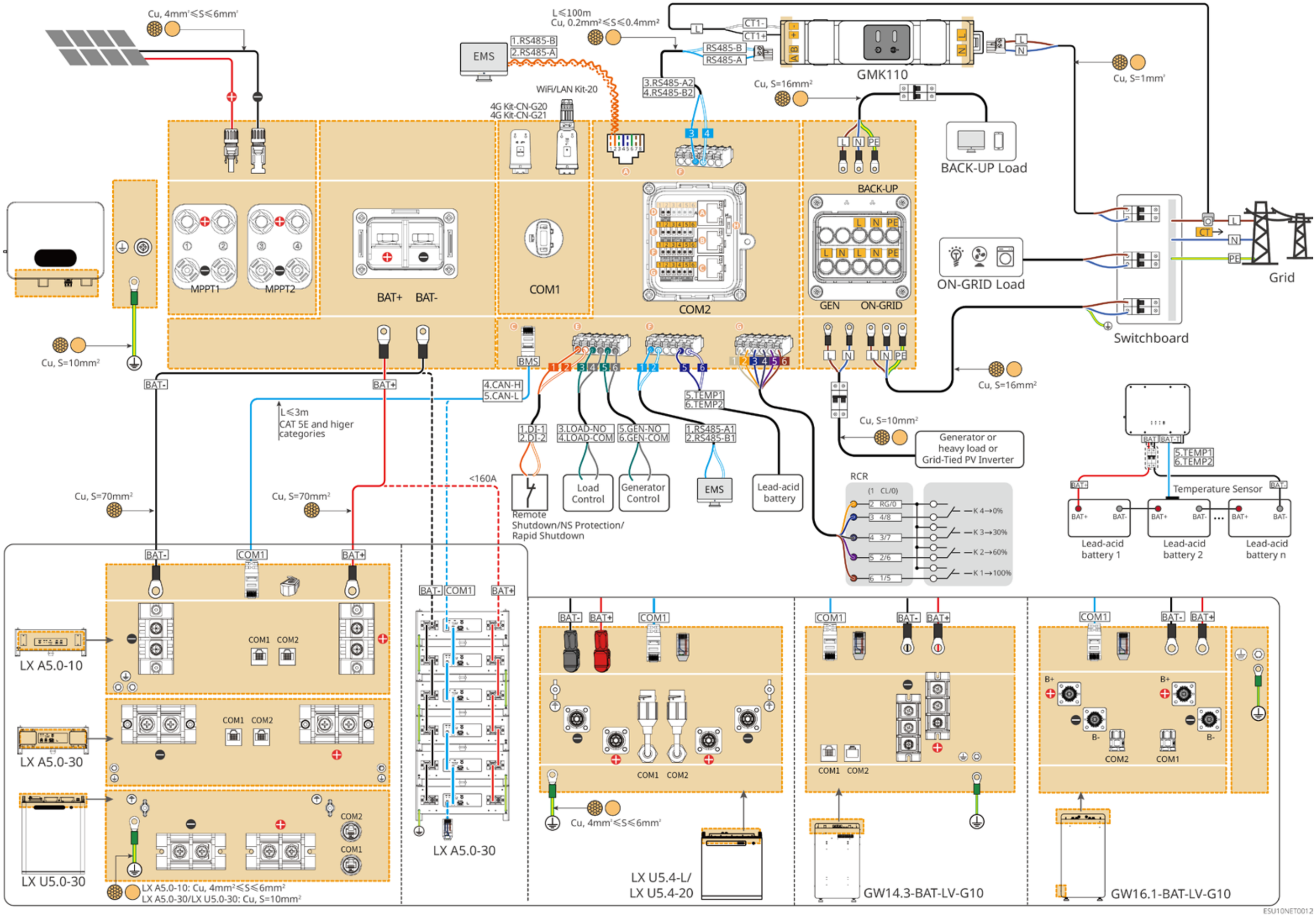
Cu, 4mm²≤S≤6mm²
L≤100m
Cu, 0.2mm²≤S≤0.4mm²
EMS
1.RS485-B
2.RS485-A
WiFi/LAN Kit-20
4G Kit-CN-G20
4G Kit-CN-G21
CT1-
CT1+
RS485-B
RS485-A
GMK110
3.RS485-A2
4.RS485-B2
Cu, S=16mm²
Cu, S=1mm²
BACK-UP Load
BACK-UP
MPPT1
MPPT2
BAT+ BAT-
COM1
COM2
GEN ON-GRID
ON-GRID Load
Grid
Switchboard
Cu, S=10mm²
BAT-
BAT+
BMS
4.CAN-H
5.CAN-L
5.TEMP1
6.TEMP2
L≤3m
CAT 5E and higer categories
1.DI-1
2.DI-2
3.LOAD-NO
4.LOAD-COM
5.GEN-NO
6.GEN-COM
1.RS485-A1
2.RS485-B1
Generator or heavy load or Grid-Tied PV Inverter
RCR
(1 CL/0)
2 RG/0
3 4/8
4 3/7
5 2/6
6 1/5
K 4→0%
K 3→30%
K 2→60%
K 1→100%
<160A
Cu, S=70mm²
Load Control
Generator Control
EMS
Lead-acid battery
Remote Shutdown/NS Protection/ Rapid Shutdown
Temperature Sensor
Lead-acid battery 1
Lead-acid battery 2
Lead-acid battery n
LX A5.0-10
LX A5.0-30
LX U5.0-30
LX A5.0-10: Cu, 4mm²≤S≤6mm²
LX A5.0-30/LX U5.0-30: Cu, S=10mm²
LX A5.0-30
LX U5.4-L/
LX U5.4-20
Cu, 4mm²≤S≤6mm²
GW14.3-BAT-LV-G10
GW16.1-BAT-LV-G10
B+
B-
ESU10NET0012

Battery Busbar Connection Mode: ES Uniq 8-12kW (parallel connected) + GM330 + Ezlink3000

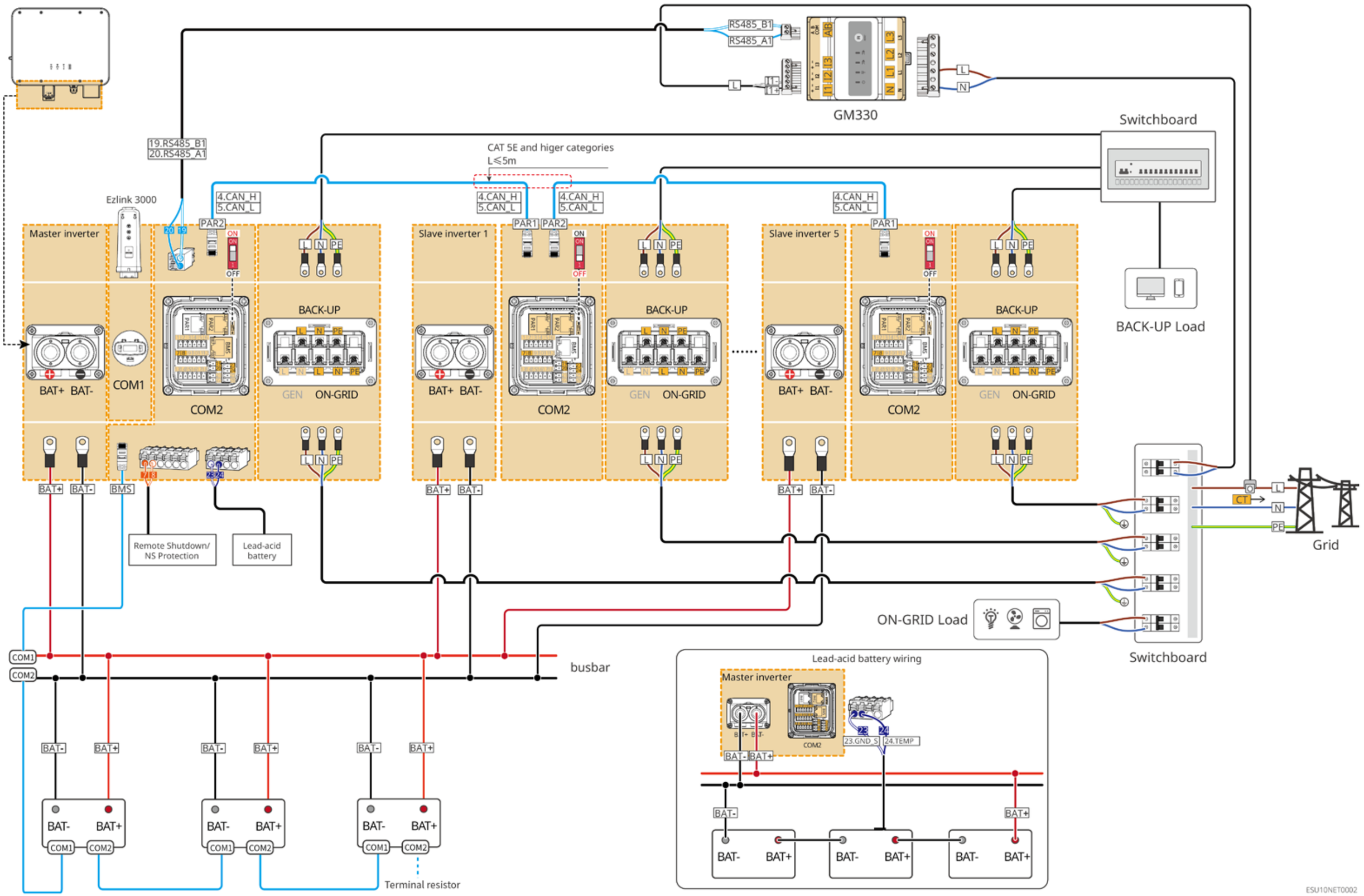

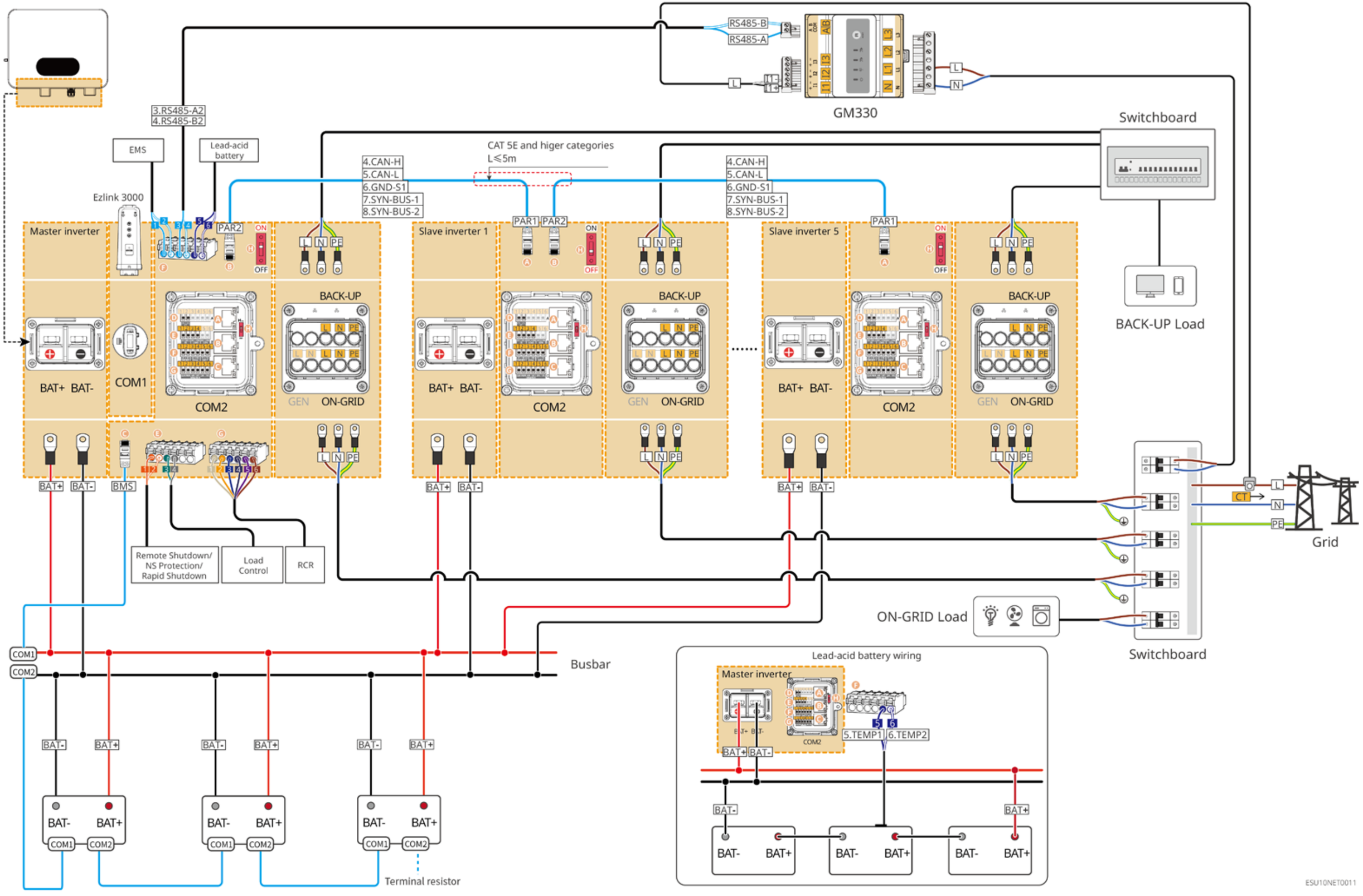
RS485-B
RS485-A
GM330
Switchboard
3.RS485-A2
4.RS485-B2
EMS
Lead-acid battery
CAT 5E and higer categories
L≤5m
4.CAN-H
5.CAN-L
6.GND-S1
7.SYN-BUS-1
8.SYN-BUS-2
Ezlink 3000
Master inverter
Slave inverter 1
Slave inverter 5
PAR1
PAR2
ON
OFF
BACK-UP
GEN
ON-GRID
BAT+
BAT-
COM1
COM2
BMS
BACK-UP Load
Remote Shutdown/
NS Protection/
Rapid Shutdown
Load
Control
RCR
Grid
CT
ON-GRID Load
Busbar
Terminal resistor
Lead-acid battery wiring
5.TEMP1
6.TEMP2
ESU10NET0011

Battery Busbar Connection Mode: ES Uniq 8-12kW (parallel connected) + GMK110 + Ezlink3000

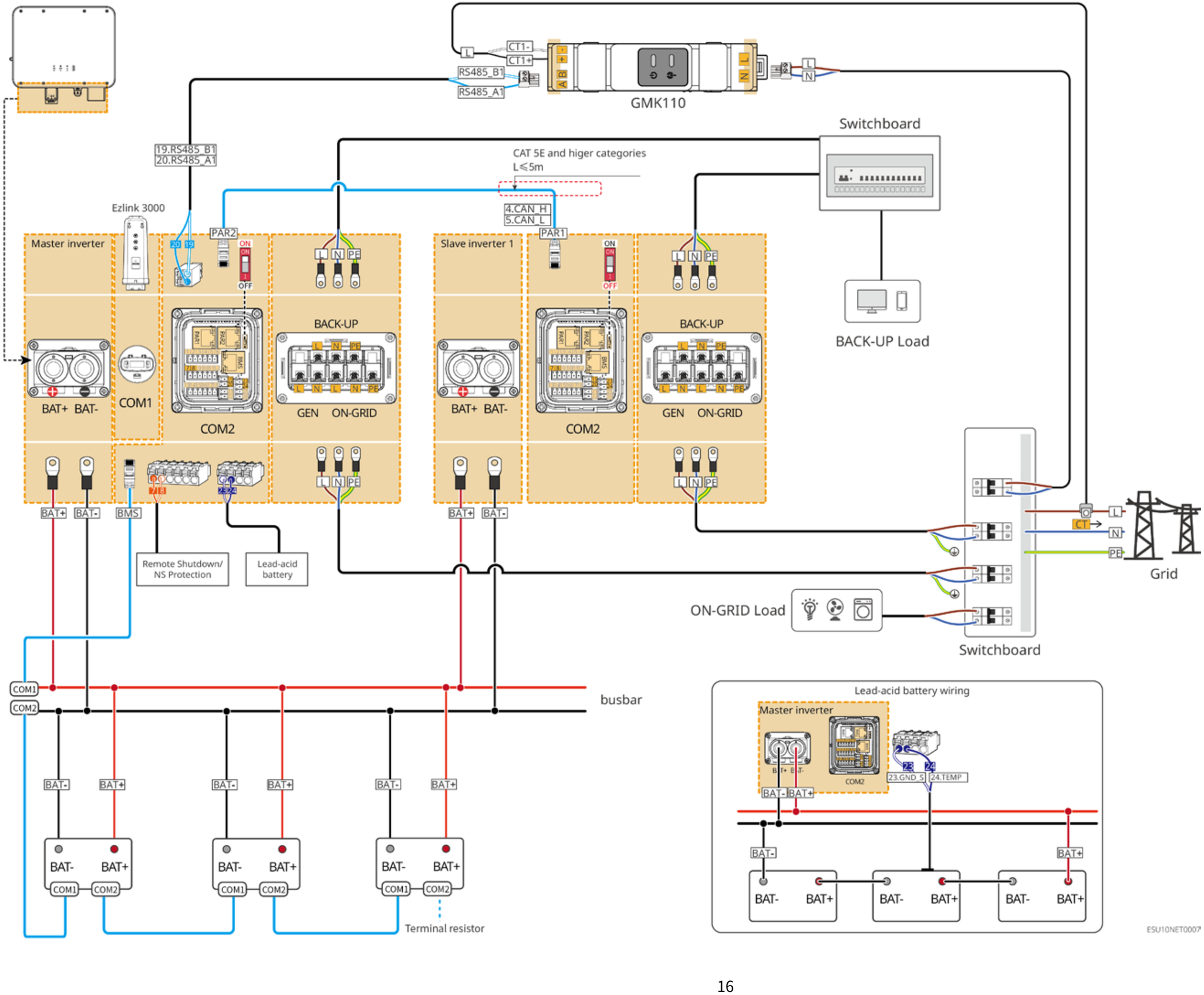

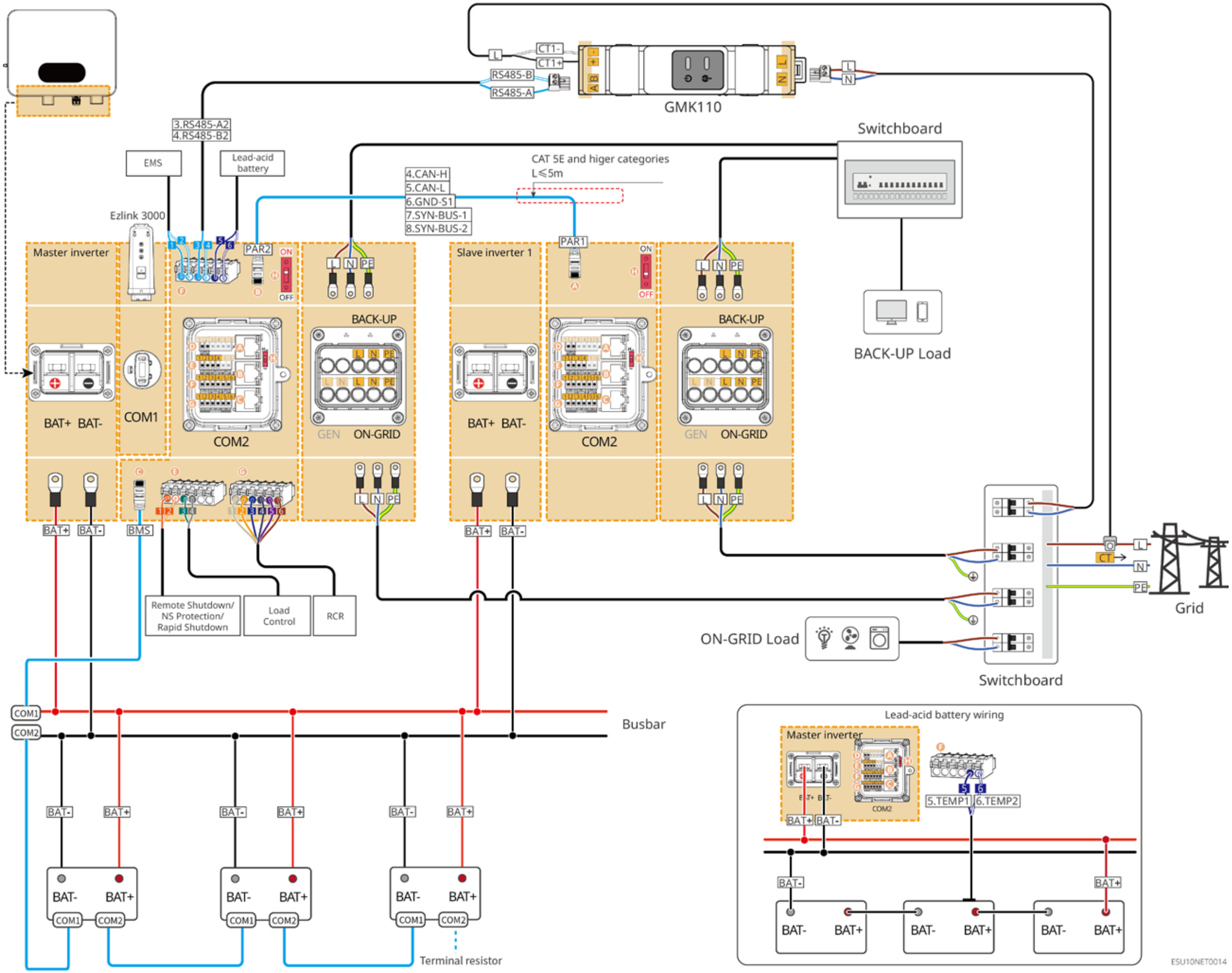
GMK110
CT1-
CT1+
RS485-B
RS485-A
L
N
Switchboard
3.RS485-A2
4.RS485-B2
EMS
Lead-acid battery
CAT 5E and higer categories
L≤5m
4.CAN-H
5.CAN-L
6.GND-S1
7.SYN-BUS-1
8.SYN-BUS-2
Ezlink 3000
Master inverter
Slave inverter 1
PAR2
PAR1
ON
OFF
BACK-UP
BACK-UP Load
BAT+ BAT-
COM1
COM2
GEN
ON-GRID
BMS
Remote Shutdown/
NS Protection/
Rapid Shutdown
Load
Control
RCR
ON-GRID Load
CT
Grid
Switchboard
Busbar
Terminal resistor
Lead-acid battery wiring
5.TEMP1
6.TEMP2
ESU10NET0014

Battery Non-Busbar Connection Mode: ES Uniq 8-12kW (parallel connected) + GM330 + Ezlink3000

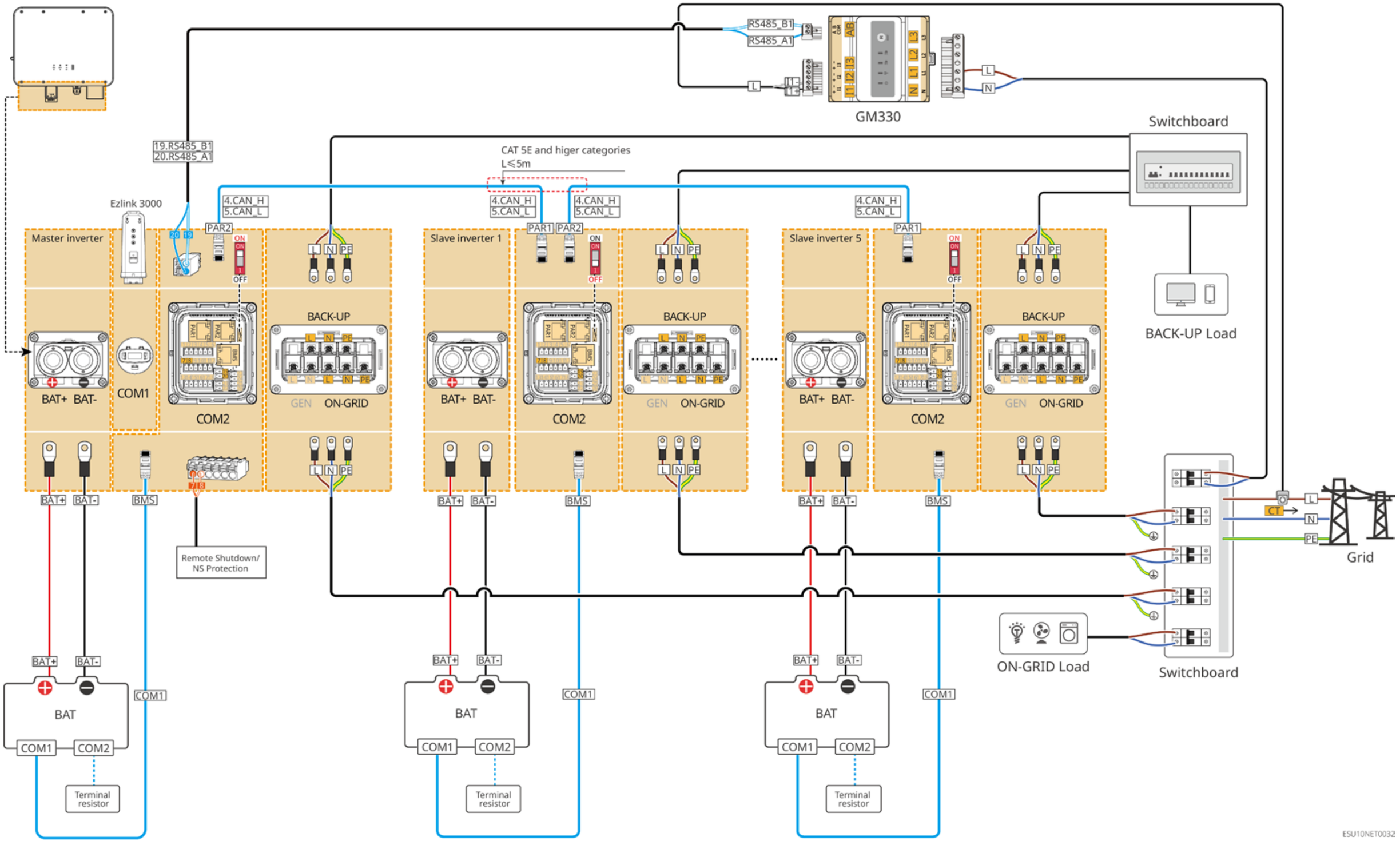

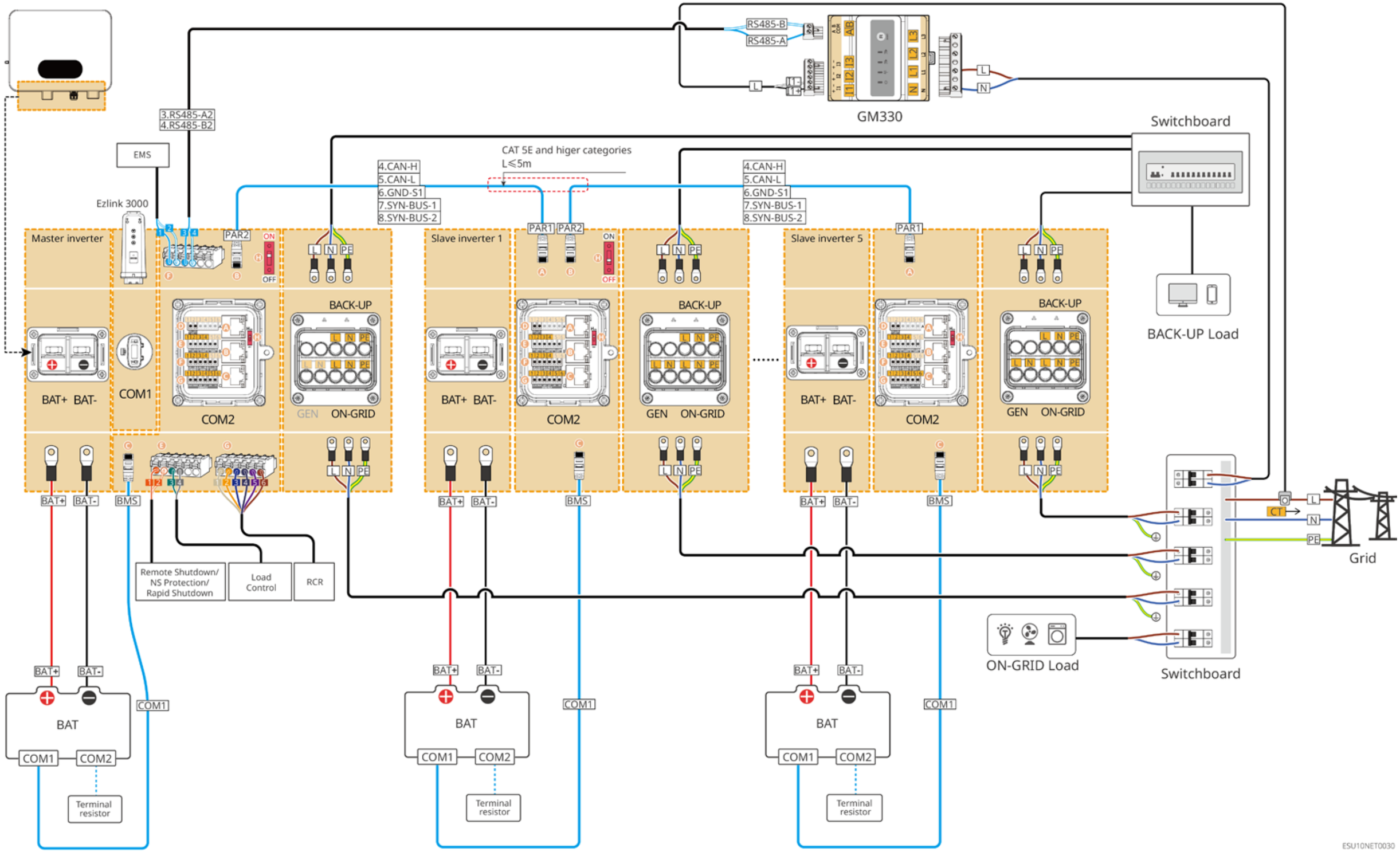
RS485-B
RS485-A
GM330
Switchboard
3.RS485-A2
4.RS485-B2
EMS
Ezlink 3000
CAT 5E and higer categories
L≤5m
4.CAN-H
5.CAN-L
6.GND-S1
7.SYN-BUS-1
8.SYN-BUS-2
Master inverter
Slave inverter 1
Slave inverter 5
PAR1
PAR2
ON
OFF
L N PE
BACK-UP
BACK-UP Load
BAT+ BAT-
COM1
COM2
GEN ON-GRID
BMS
Remote Shutdown/
NS Protection/
Rapid Shutdown
Load
Control
RCR
BAT
Terminal
resistor
ON-GRID Load
Switchboard
CT
Grid
ESU10NET0030

Battery Non-Busbar Connection Mode: ES Uniq 8-12kW (parallel connected) + GMK110 + Ezlink3000

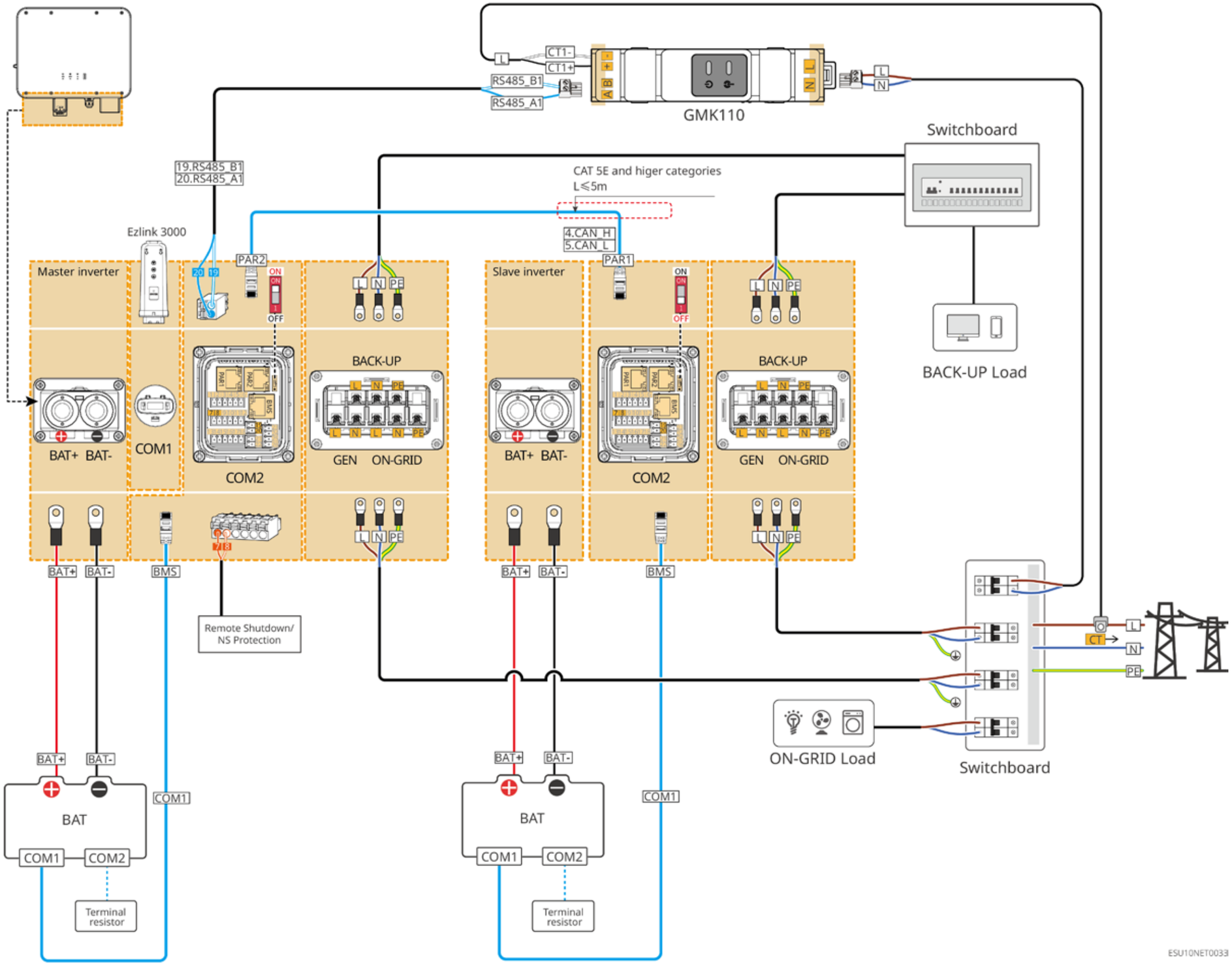

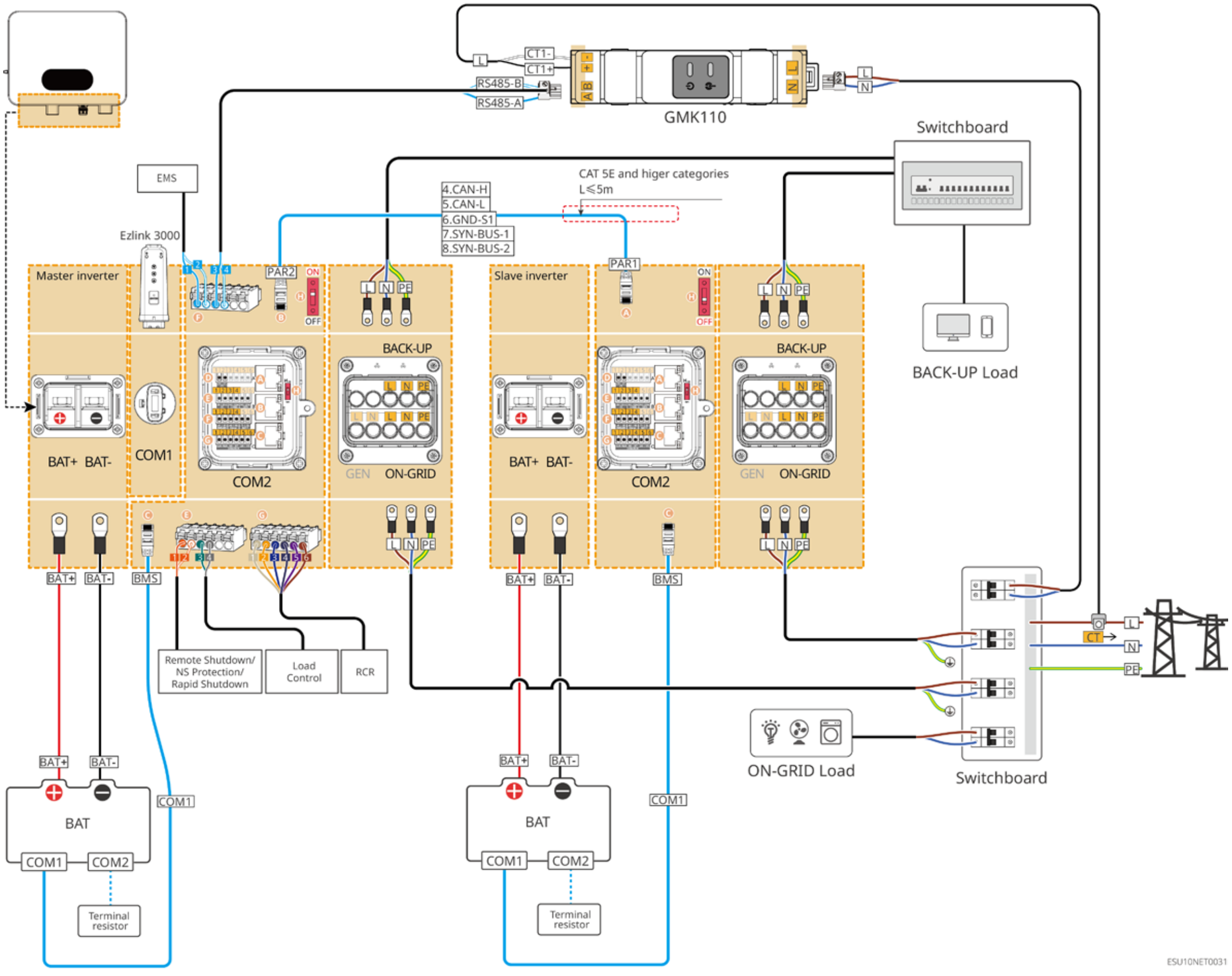
GMK110
CT1-
CT1+
RS485-B
RS485-A
Switchboard
EMS
CAT 5E and higer categories
L≤5m
4.CAN-H
5.CAN-L
6.GND-S1
7.SYN-BUS-1
8.SYN-BUS-2
Ezlink 3000
Master inverter
Slave inverter
PAR2
PAR1
ON
OFF
BACK-UP
BACK-UP Load
BAT+ BAT-
COM1
COM2
GEN
ON-GRID
BMS
Remote Shutdown/
NS Protection/
Rapid Shutdown
Load
Control
RCR
ON-GRID Load
Switchboard
CT
BAT
Terminal
resistor
ESU10NET0031

Three-Phase System: ES Uniq 8-12kW (parallel connected) + Builit-in smart meter + Ezlink3000
Scenario of each phase individually connecting to single-phase loads

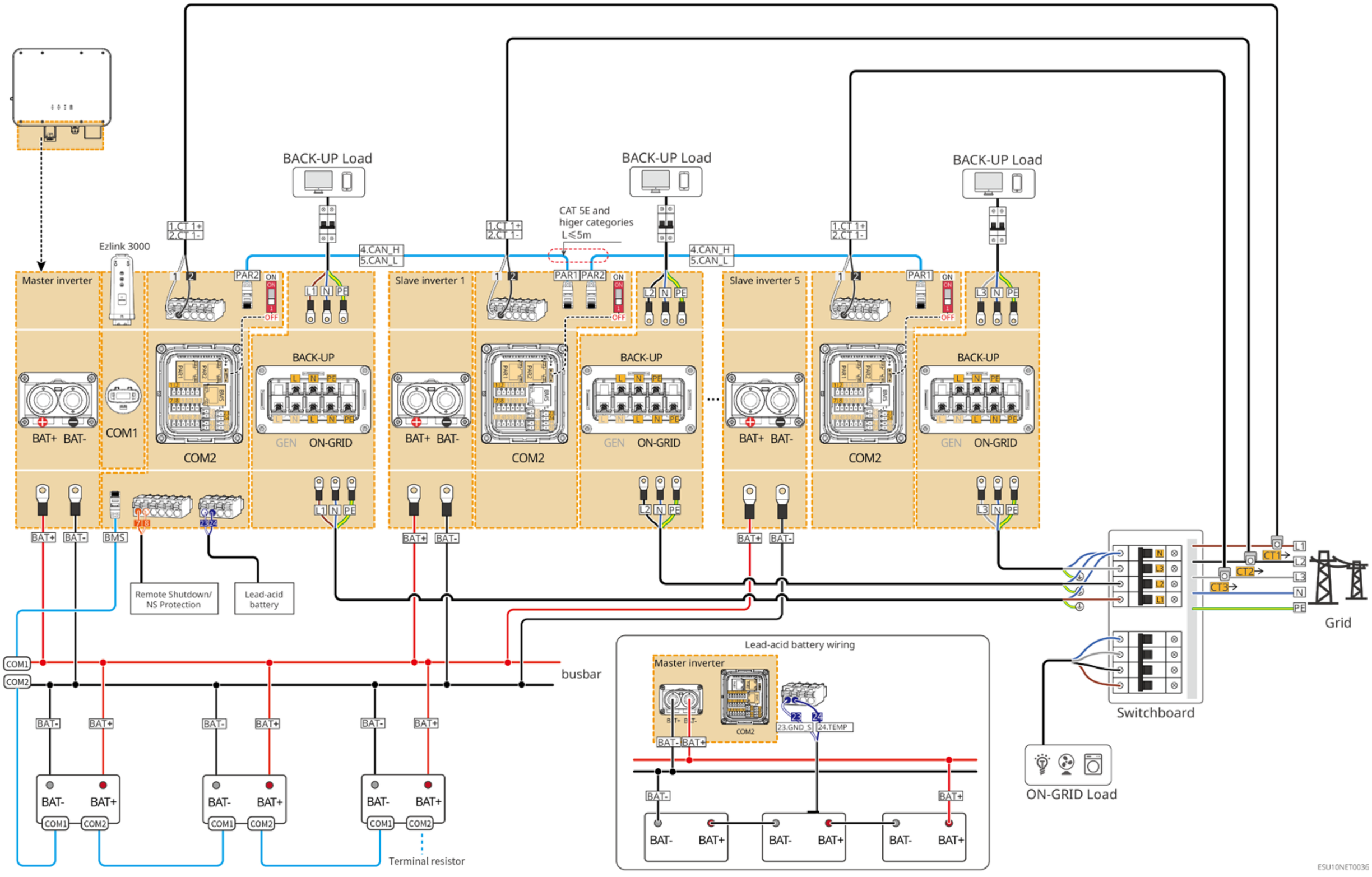

Three-Phase System: ES Uniq 8-12kW (parallel connected) + Builit-in smart meter + Ezlink3000

Scenario of connecting to three-phase loads

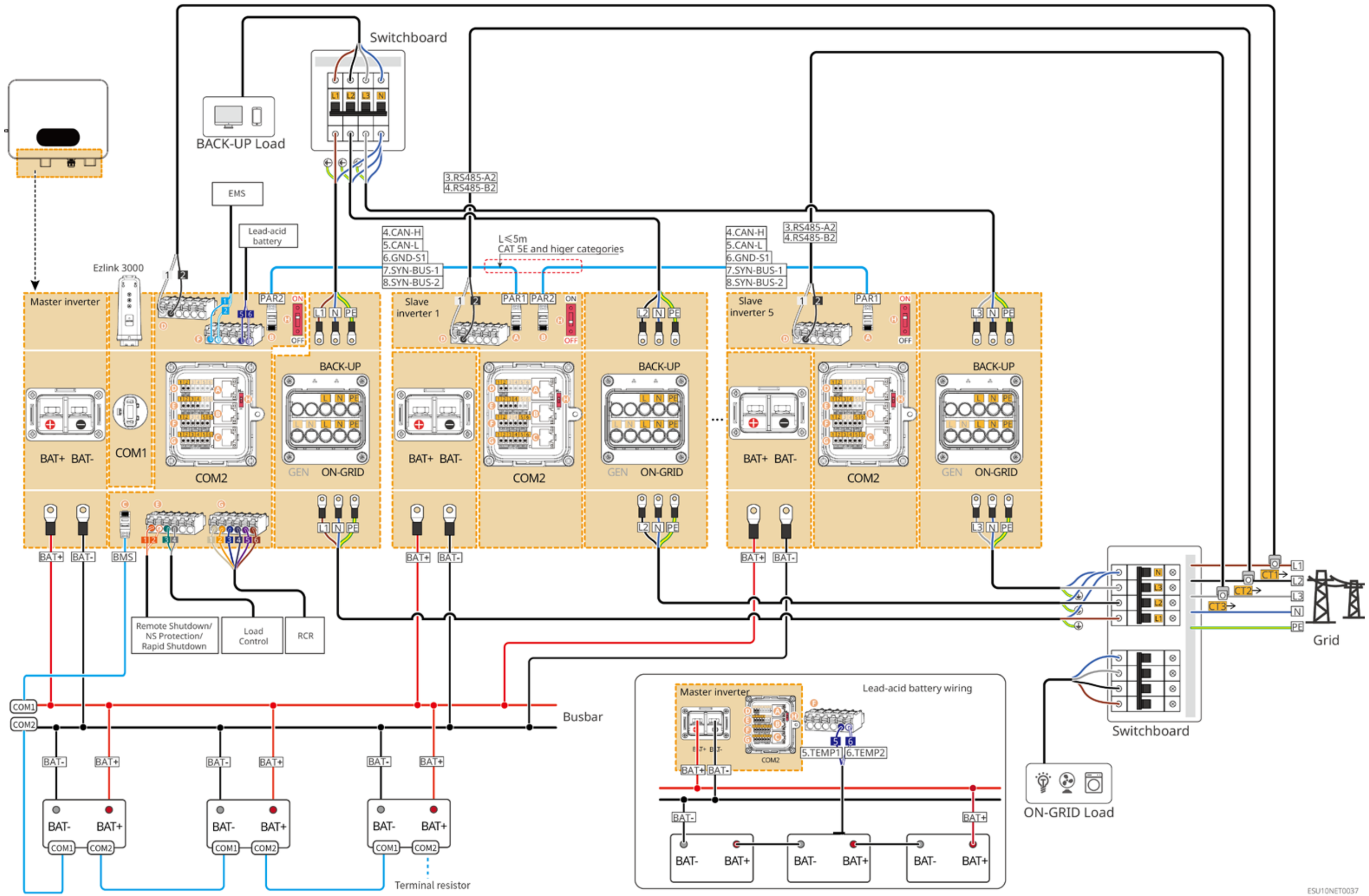

Three-Phase System: ES Uniq 8-12kW (parallel connected) + GMK110 + Ezlink3000
Scenario of each phase individually connecting to single-phase loads

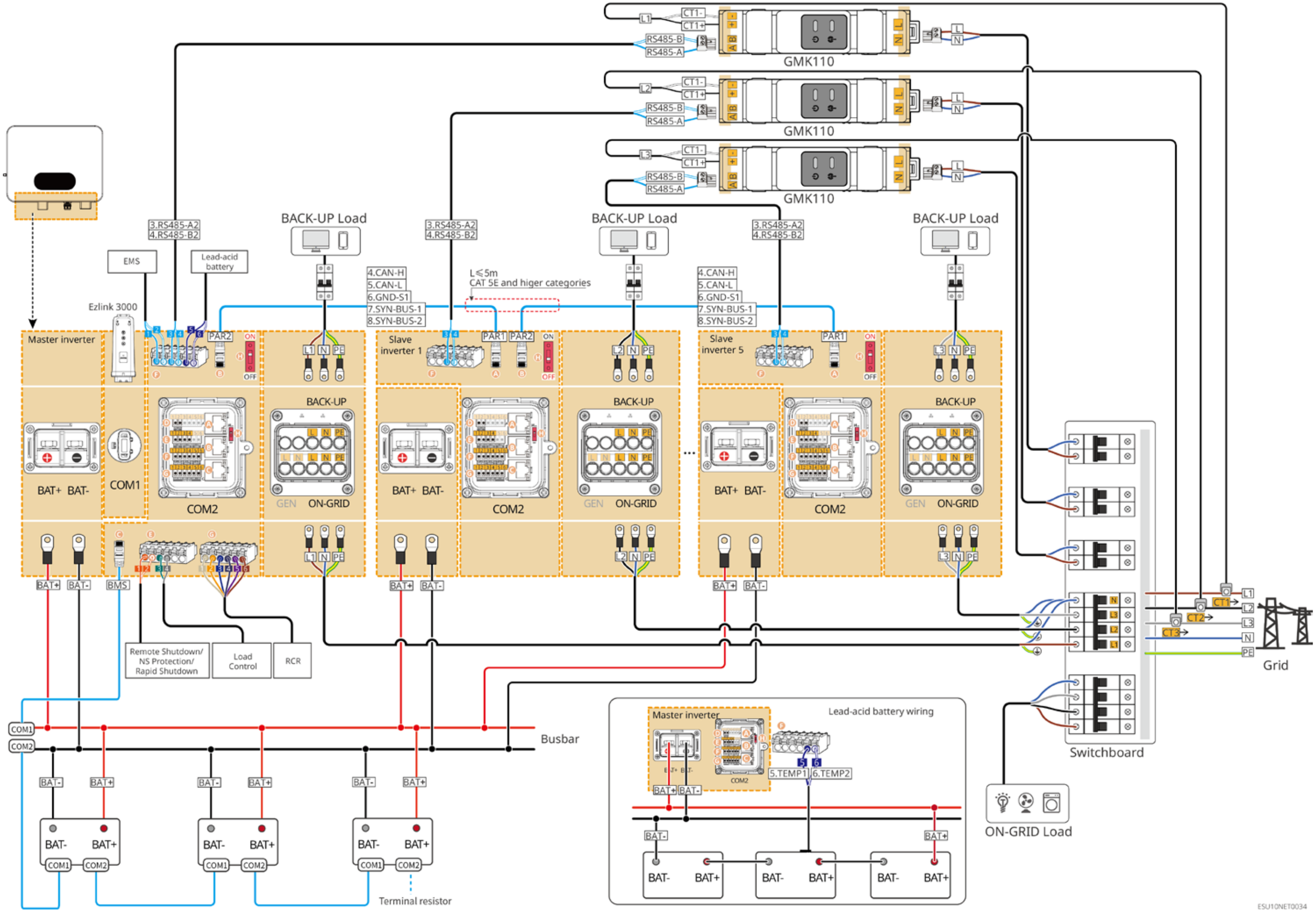

Three-Phase System: ES Uniq 8-12kW (parallel connected) + GMK110 + Ezlink3000

Scenario of connecting to three-phase loads

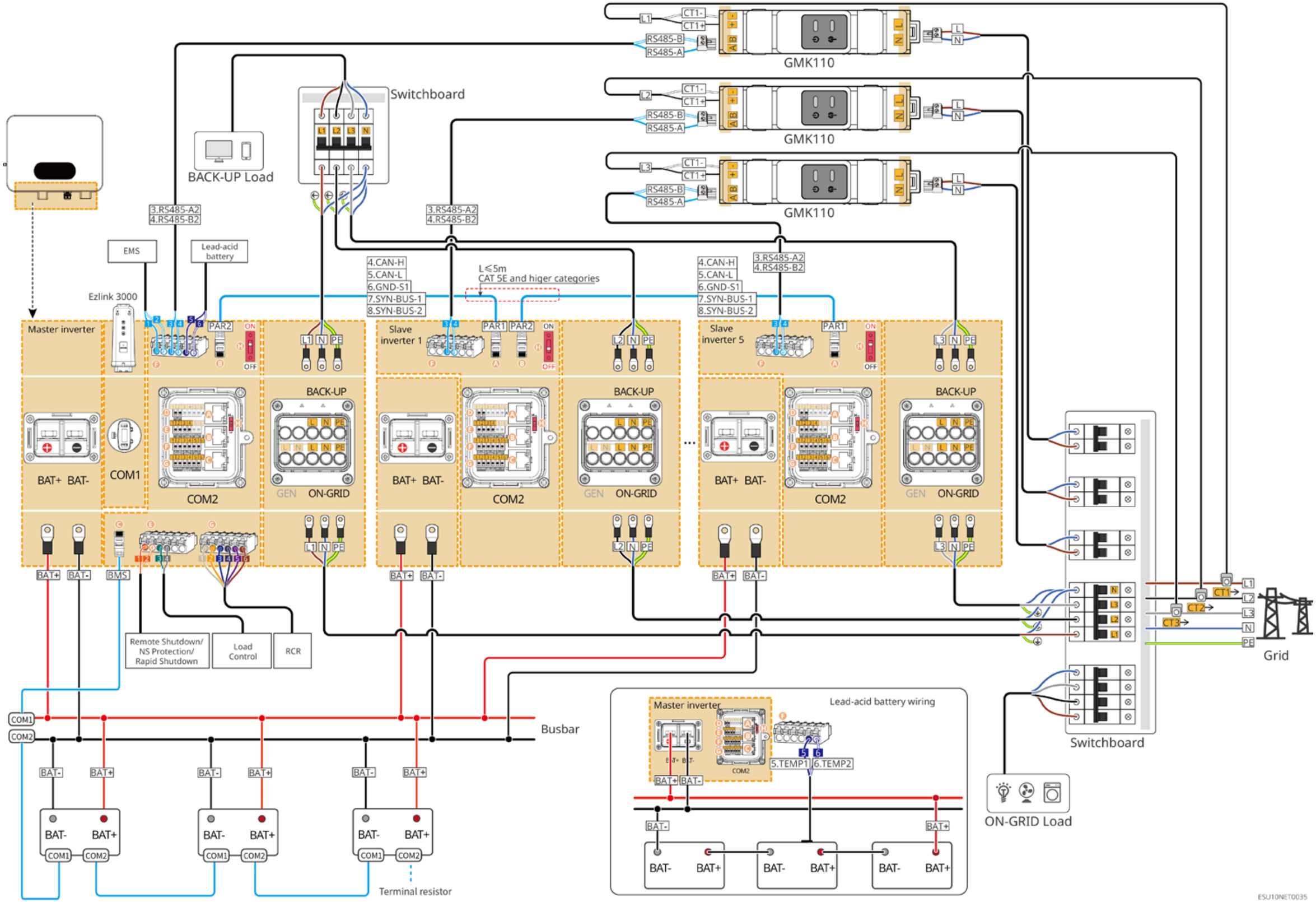

Battery System Wiring Diagram

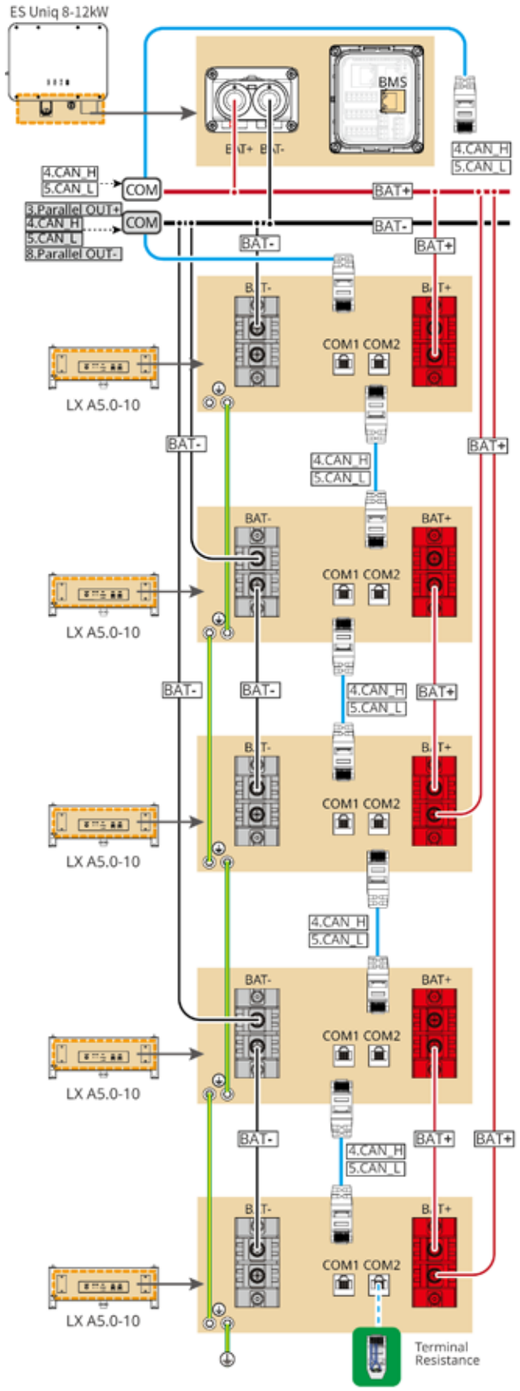

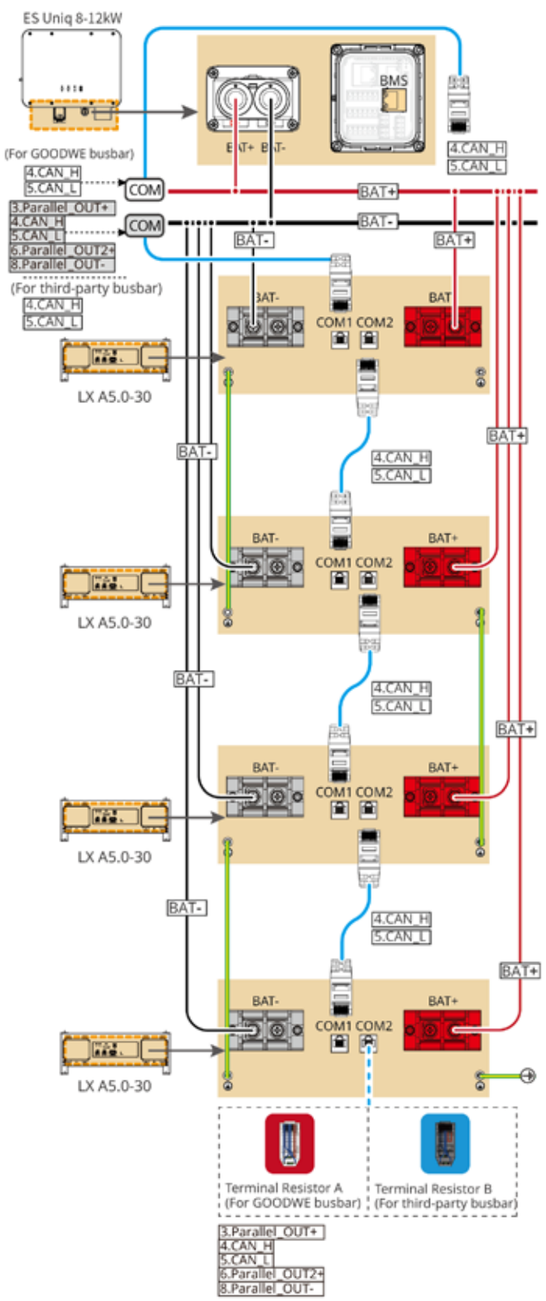

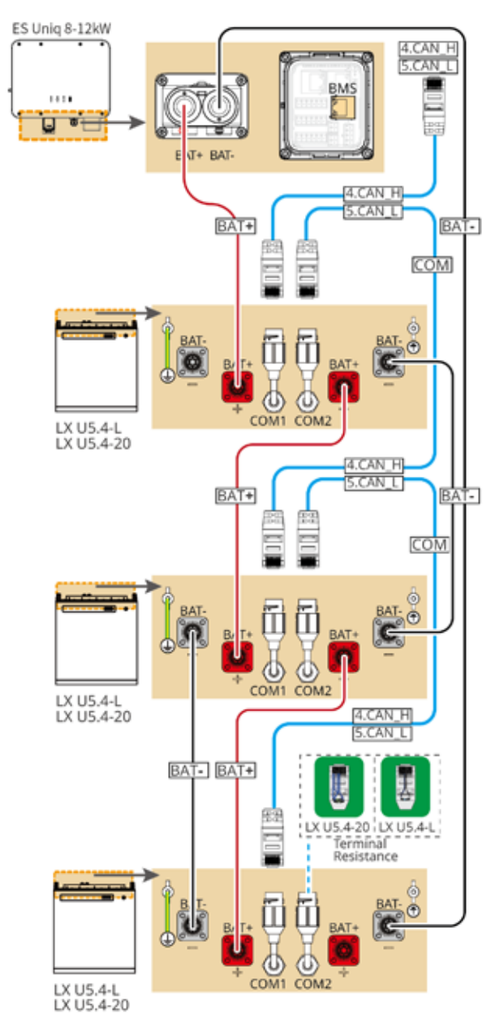

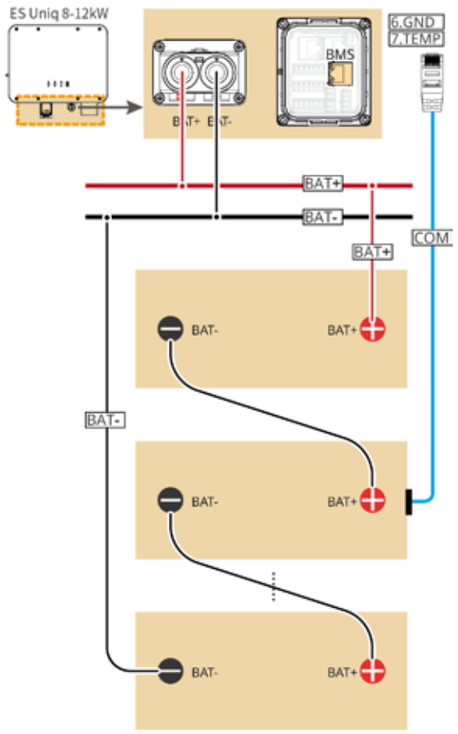

The quantity of batteries depends on the required voltage.

CAT 5E and higer categories

ESU10NET0005

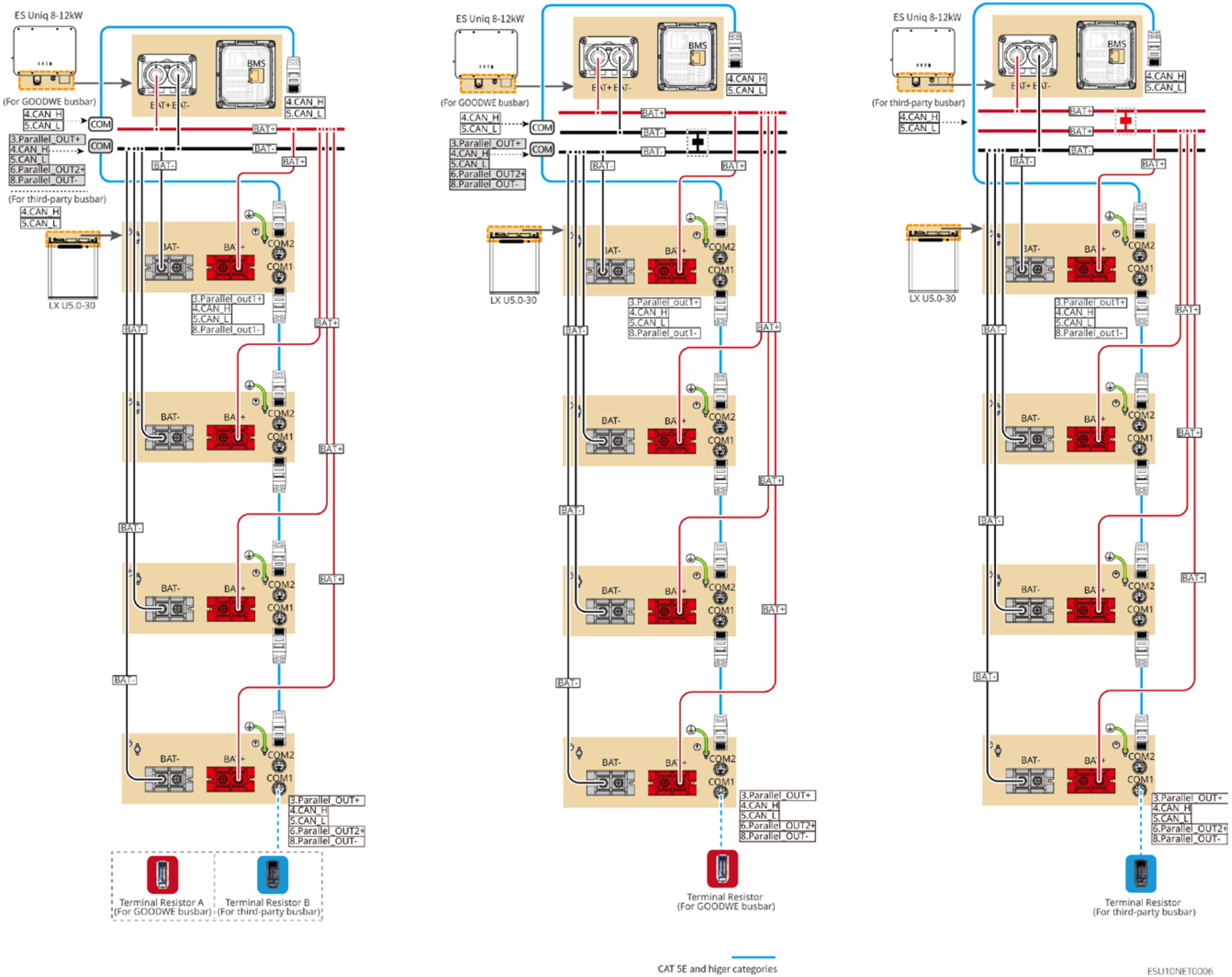
ES Uniq 8-12kW
(For GOODWE busbar)
4.CAN_H
5.CAN_L
COM
3.Parallel_OUT+
4.CAN_H
5.CAN_L
6.Parallel_OUT2+
8.Parallel_OUT-
(For third-party busbar)
4.CAN_H
5.CAN_L
BMS
BAT+
BAT-
LX U5.0-30
COM2
COM1
3.Parallel_out1+
4.CAN_H
5.CAN_L
8.Parallel_out1-
Terminal Resistor A
(For GOODWE busbar)
Terminal Resistor B
(For third-party busbar)
ES Uniq 8-12kW
(For GOODWE busbar)
LX U5.0-30
Terminal Resistor
(For GOODWE busbar)
ES Uniq 8-12kW
(For third-party busbar)
LX U5.0-30
Terminal Resistor
(For third-party busbar)
CAT 5E and higer categories
ESU10NET0006

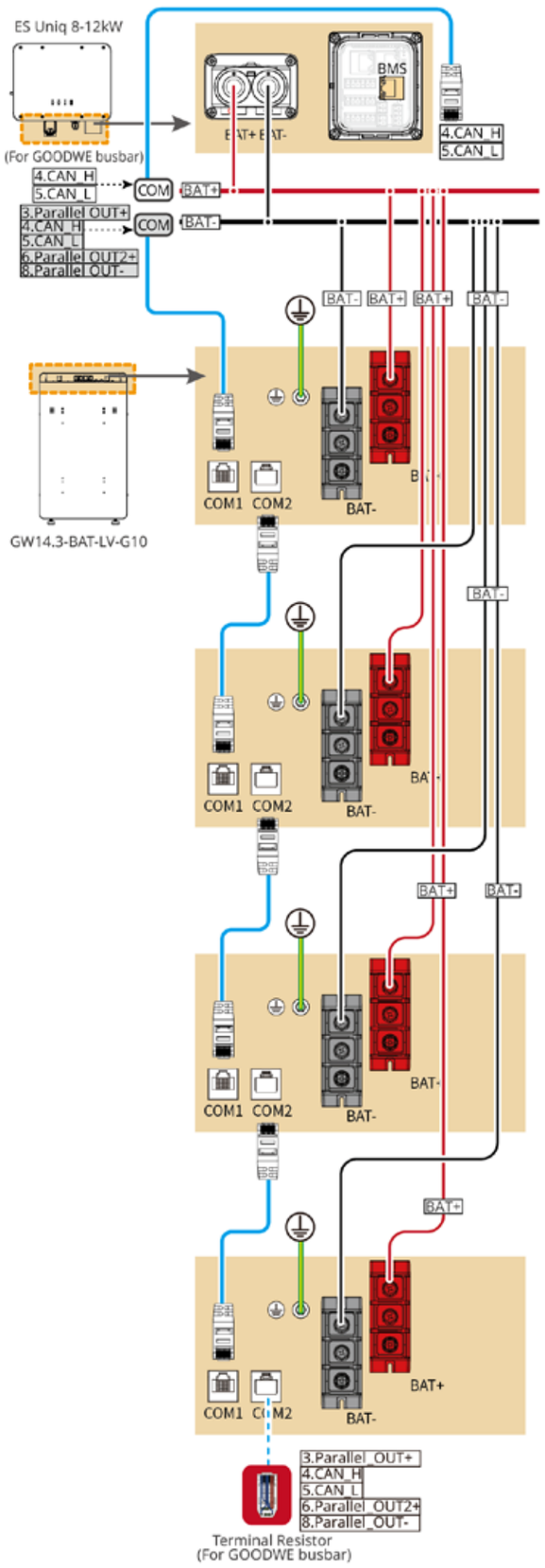

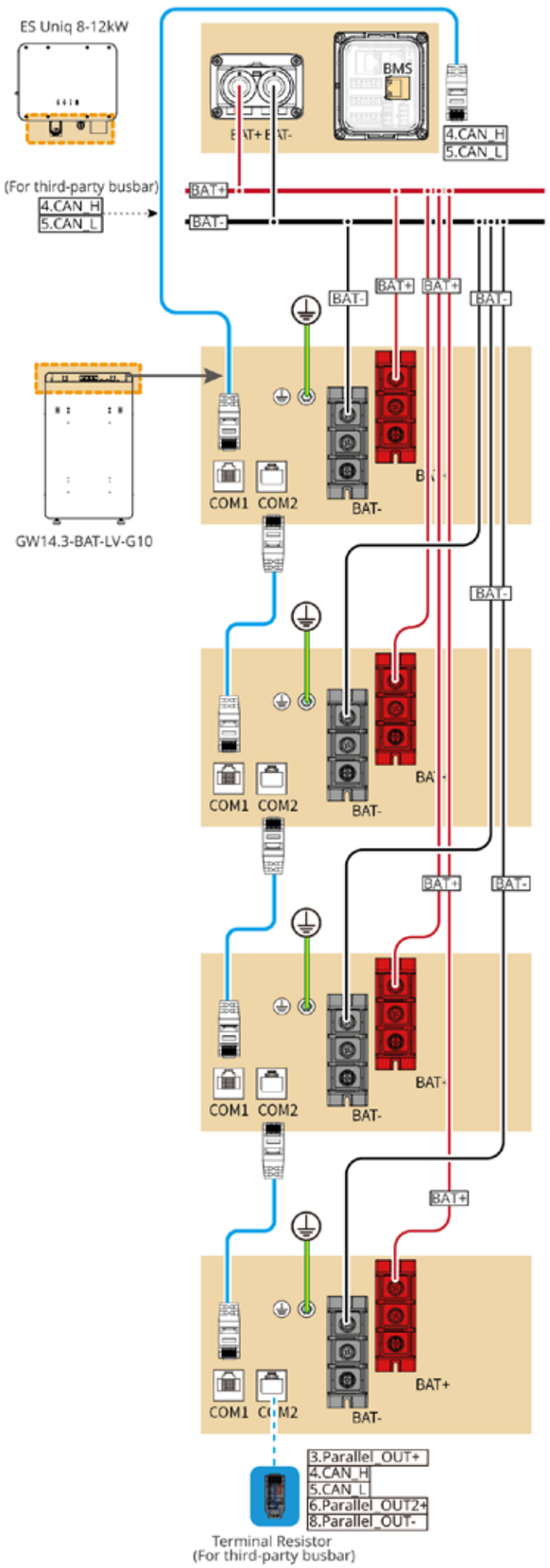

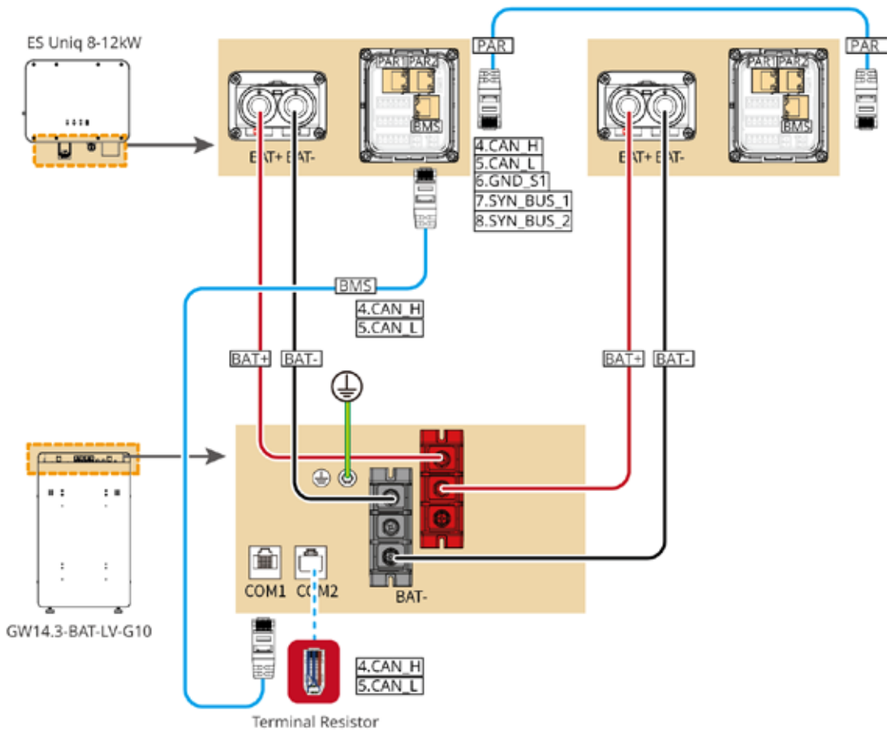

ESU10NET0024

Battery System Wiring Diagram

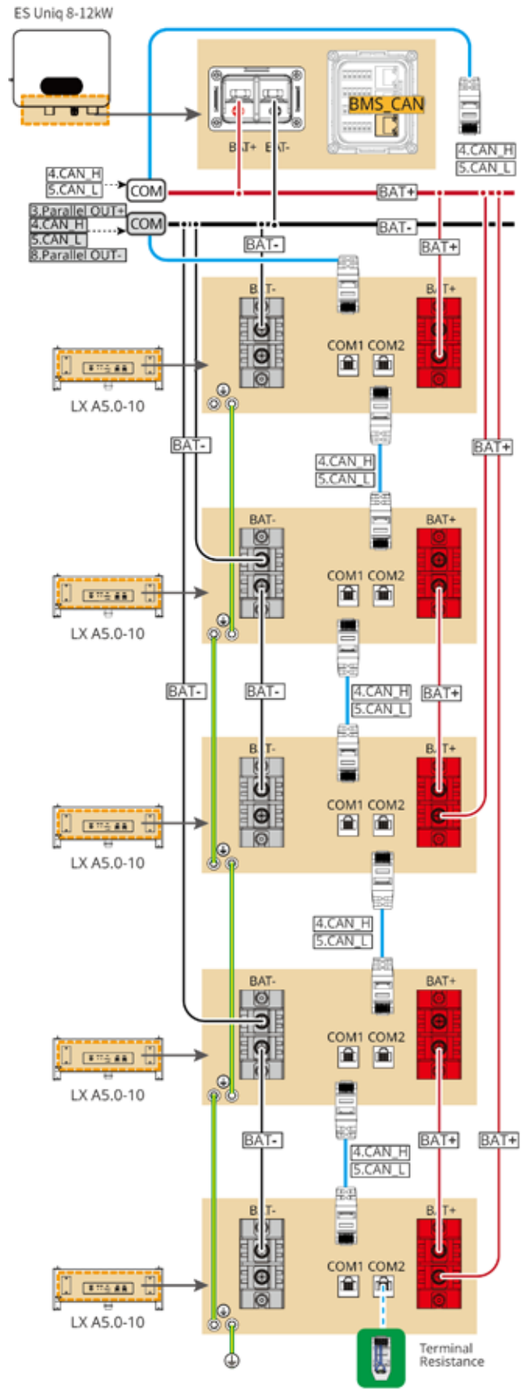

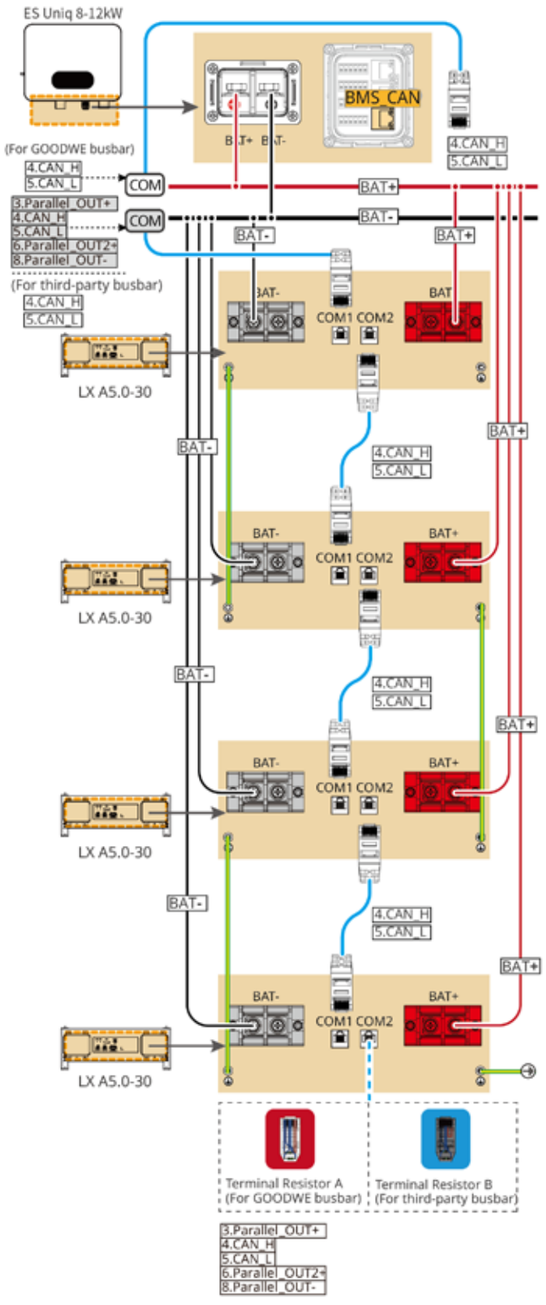

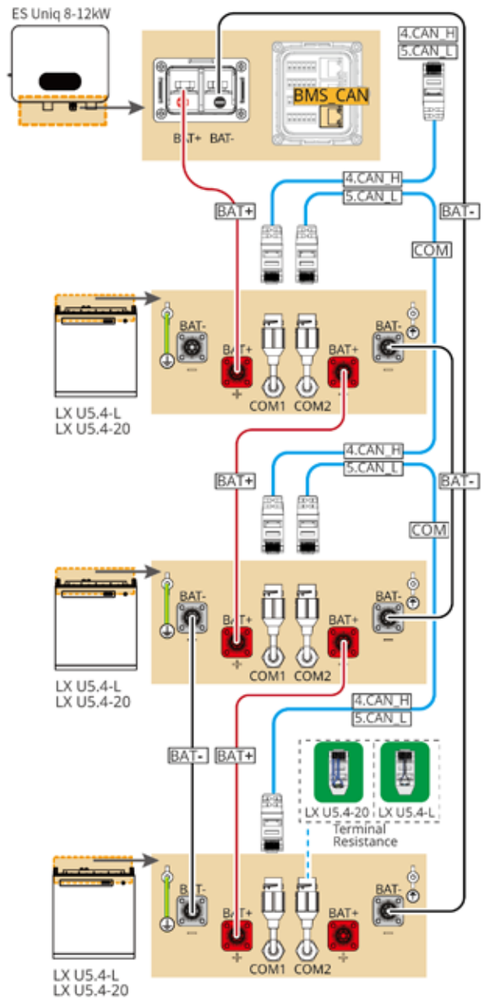

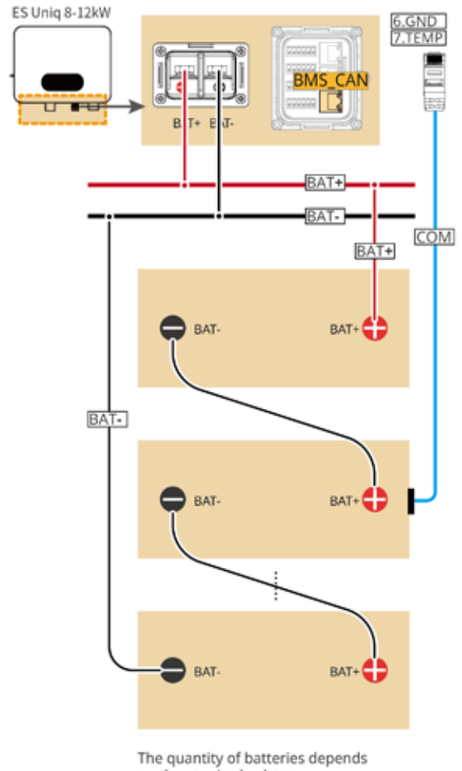

The quantity of batteries depends on the required voltage.

CAT 5E and higer categories

ESU10NET0015

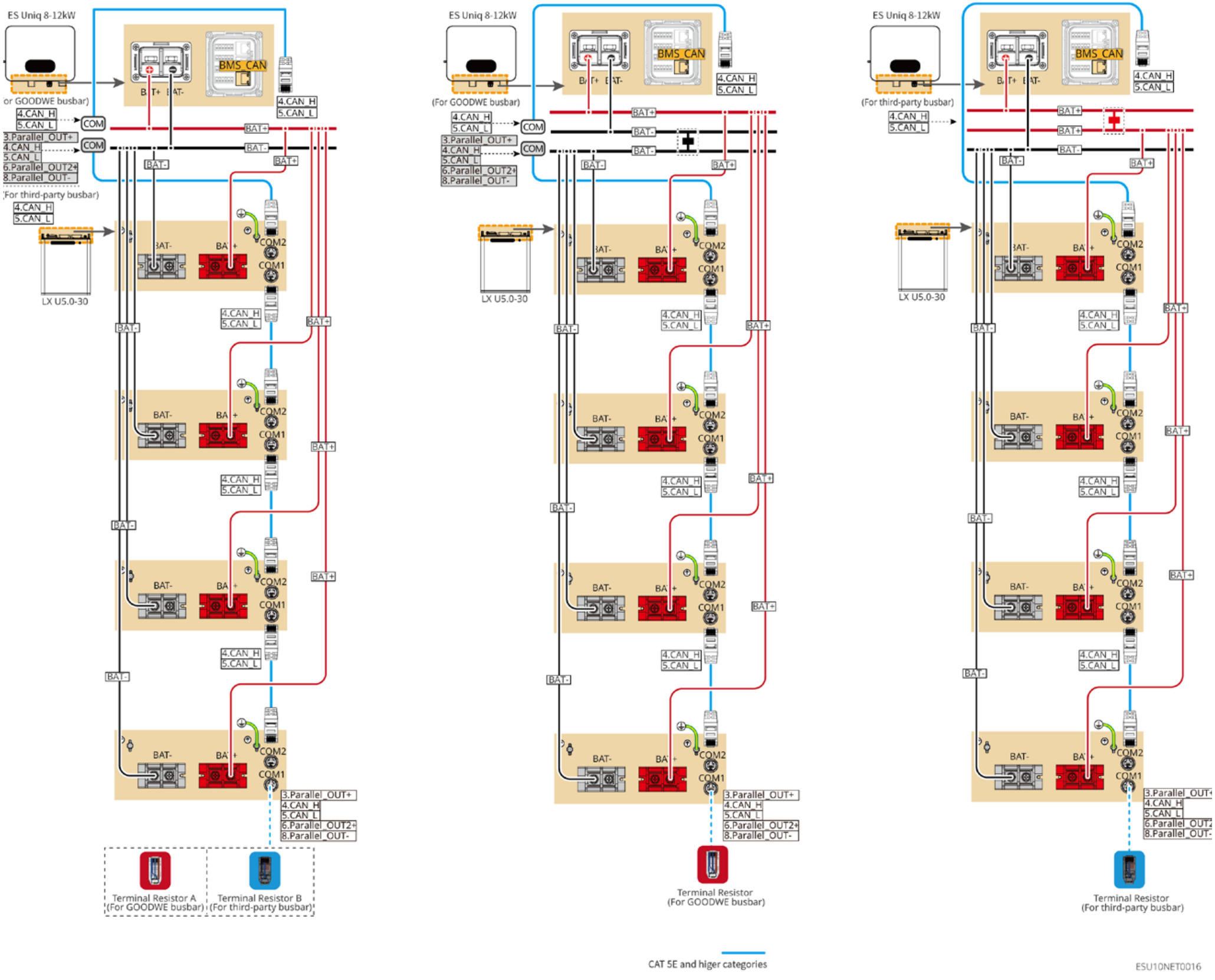
ES Uniq 8-12kW
BMS_CAN
BAT+ BAT-
4.CAN_H
5.CAN_L
COM
3.Parallel_OUT+
4.CAN_H
5.CAN_L
6.Parallel_OUT2+
8.Parallel_OUT-
(For third-party busbar)
4.CAN_H
5.CAN_L
LX U5.0-30
BAT-
BAT+
COM2
COM1
3.Parallel_OUT+
4.CAN_H
5.CAN_L
6.Parallel_OUT2+
8.Parallel_OUT-
Terminal Resistor A
(For GOODWE busbar)
Terminal Resistor B
(For third-party busbar)
ES Uniq 8-12kW
BMS_CAN
(For GOODWE busbar)
4.CAN_H
5.CAN_L
COM
3.Parallel_OUT+
4.CAN_H
5.CAN_L
6.Parallel_OUT2+
8.Parallel_OUT-
LX U5.0-30
BAT-
BAT+
COM2
COM1
3.Parallel_OUT+
4.CAN_H
5.CAN_L
6.Parallel_OUT2+
8.Parallel_OUT-
Terminal Resistor
(For GOODWE busbar)
CAT 5E and higer categories
ES Uniq 8-12kW
BMS_CAN
(For third-party busbar)
4.CAN_H
5.CAN_L
LX U5.0-30
BAT-
BAT+
COM2
COM1
3.Parallel_OUT+
4.CAN_H
5.CAN_L
6.Parallel_OUT2+
8.Parallel_OUT-
Terminal Resistor
(For third-party busbar)
ESU10NET0016

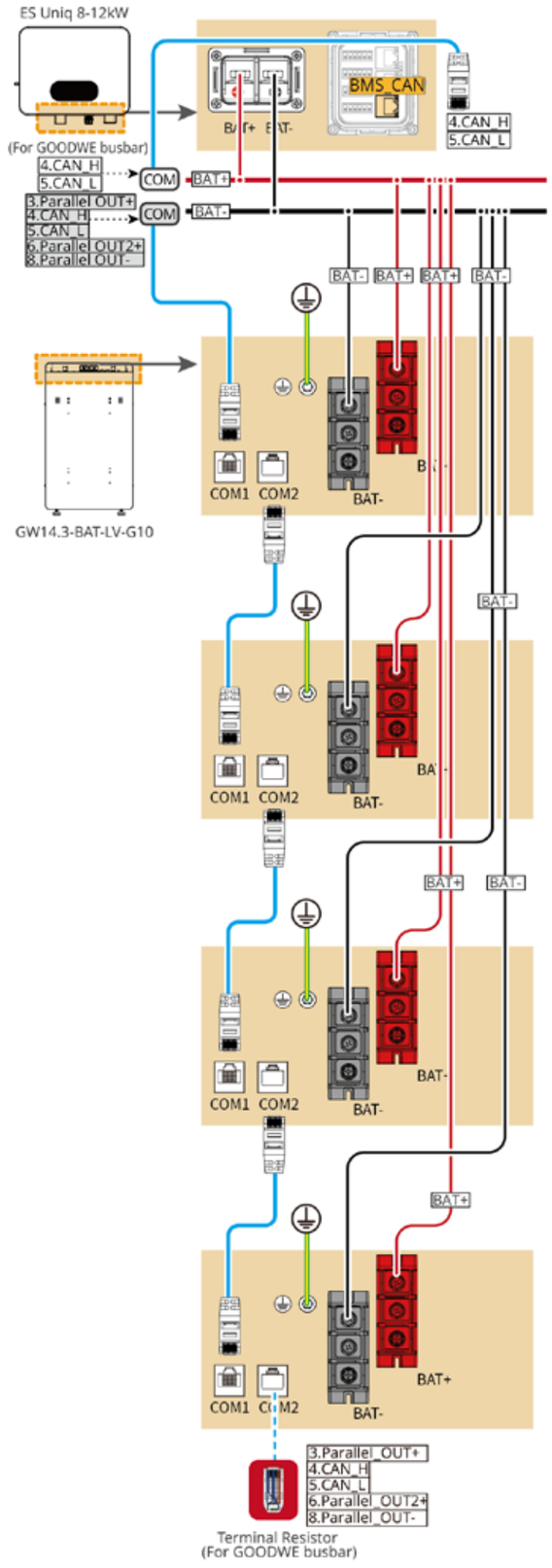

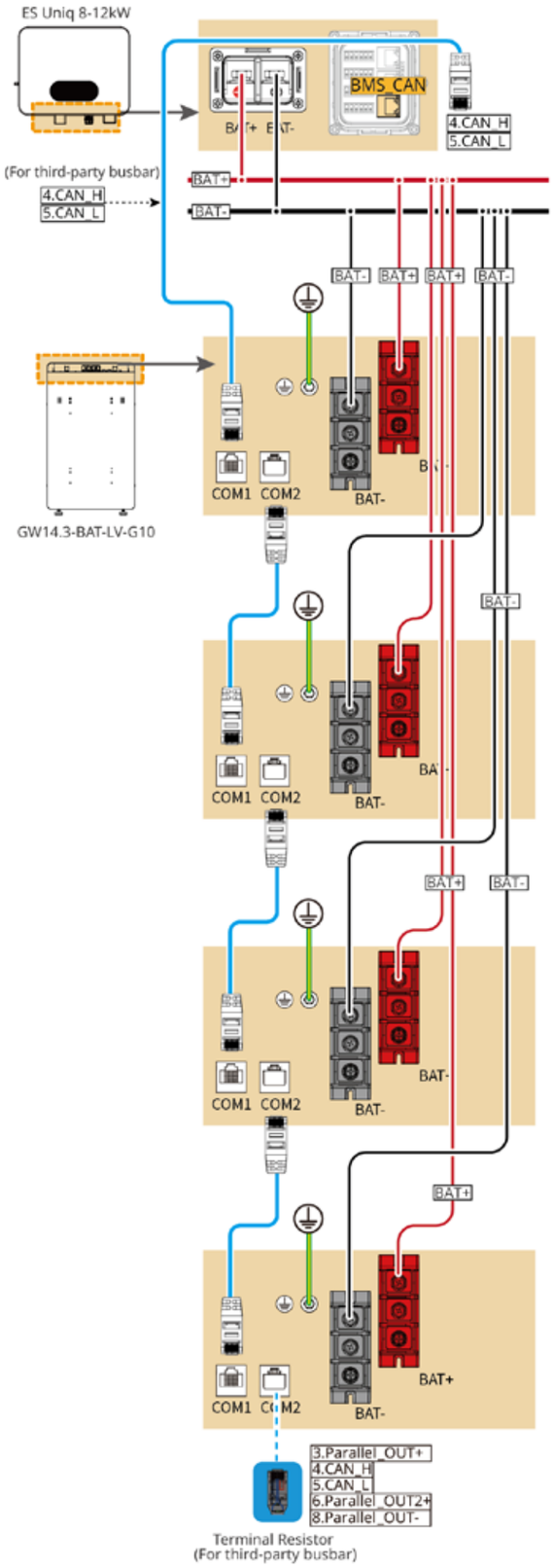

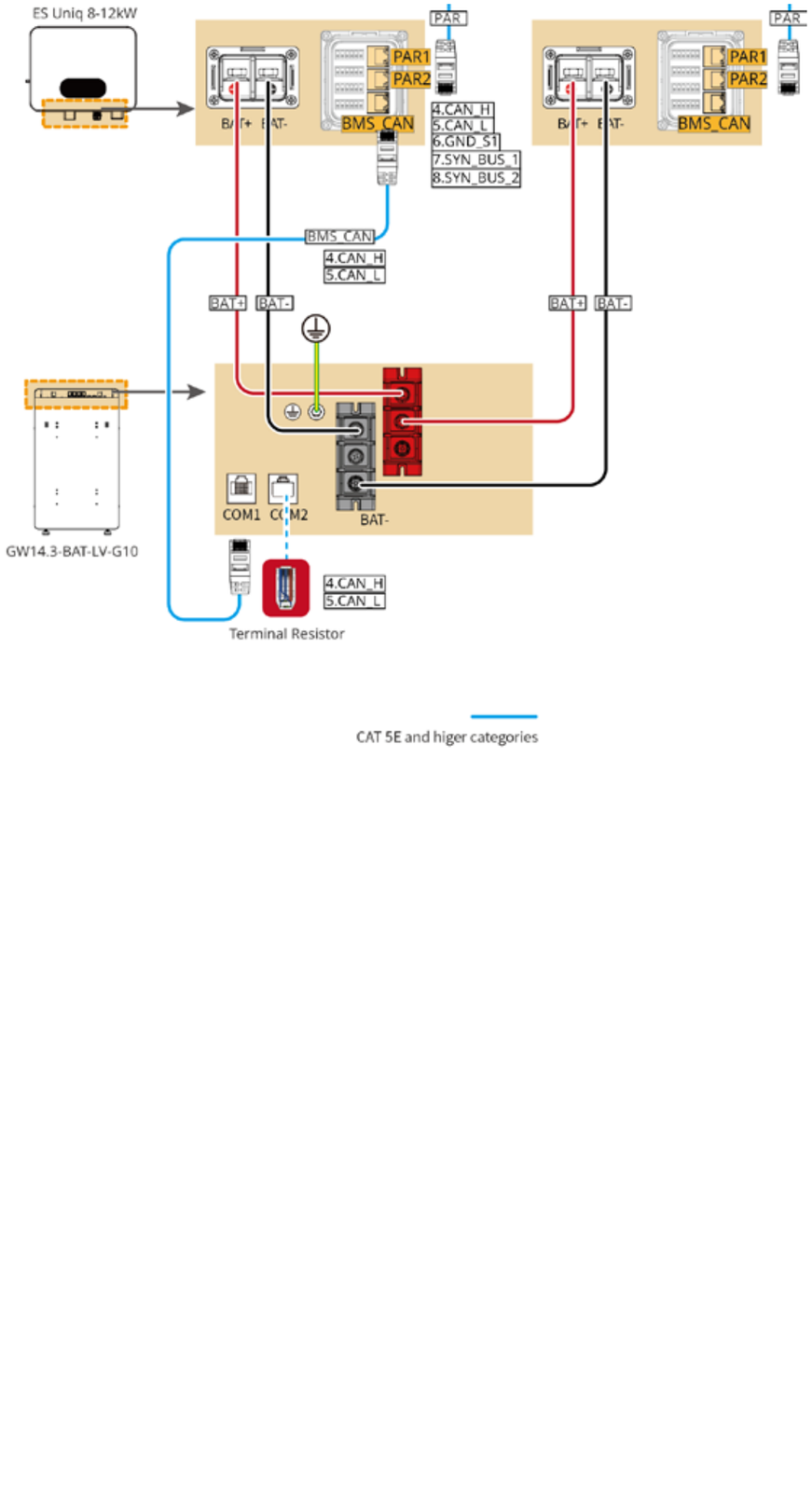

ESU10NET0025

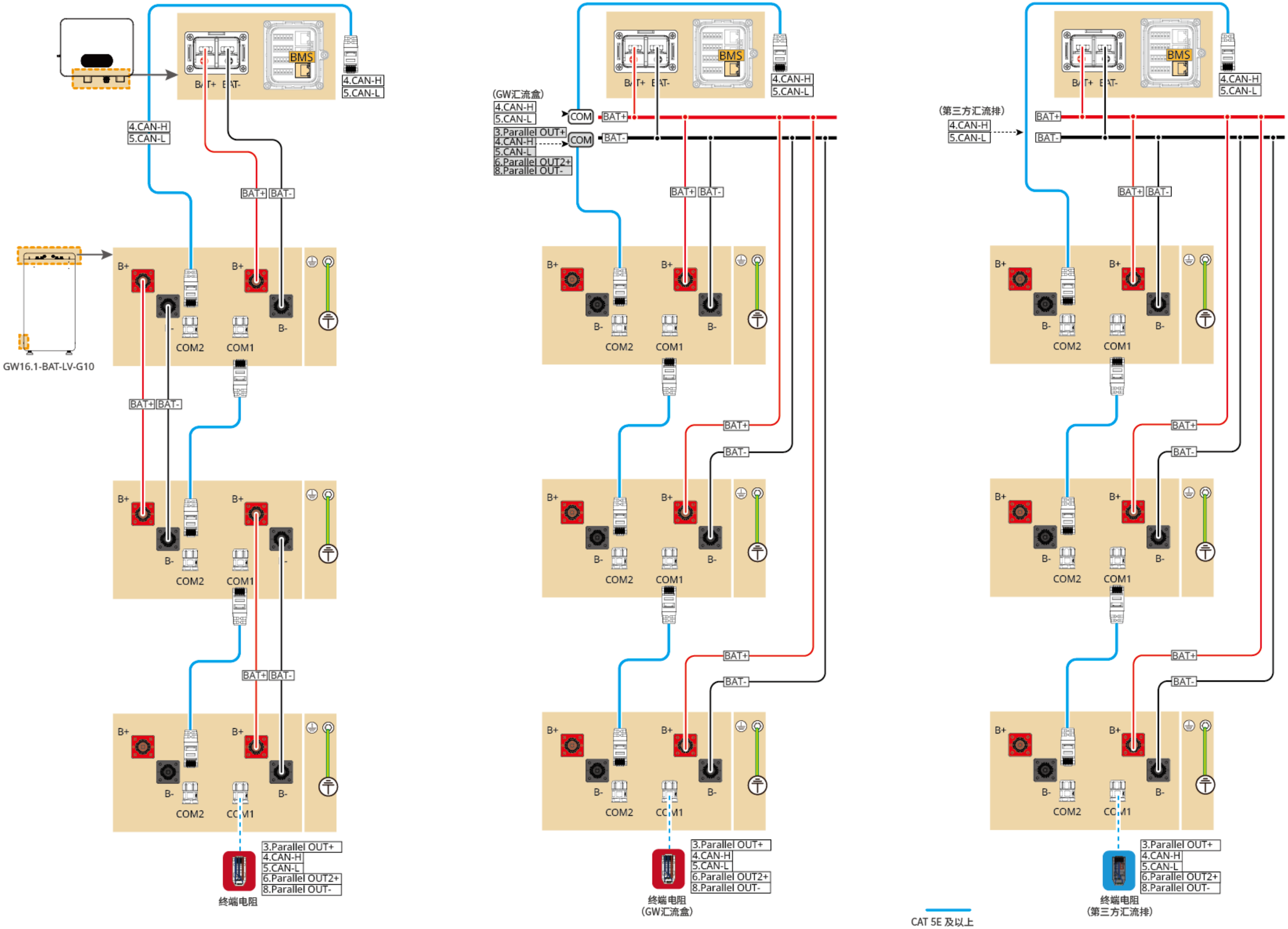
BMS
4.CAN-H
5.CAN-L
BAT+
BAT-
B+
B-
COM2
COM1
GW16.1-BAT-LV-G10
3.Parallel OUT+
4.CAN-H
5.CAN-L
6.Parallel OUT2+
8.Parallel OUT-
终端电阻
(GW汇流盒)
COM
(第三方汇流排)
CAT 5E 及以上
ESU10NET0042

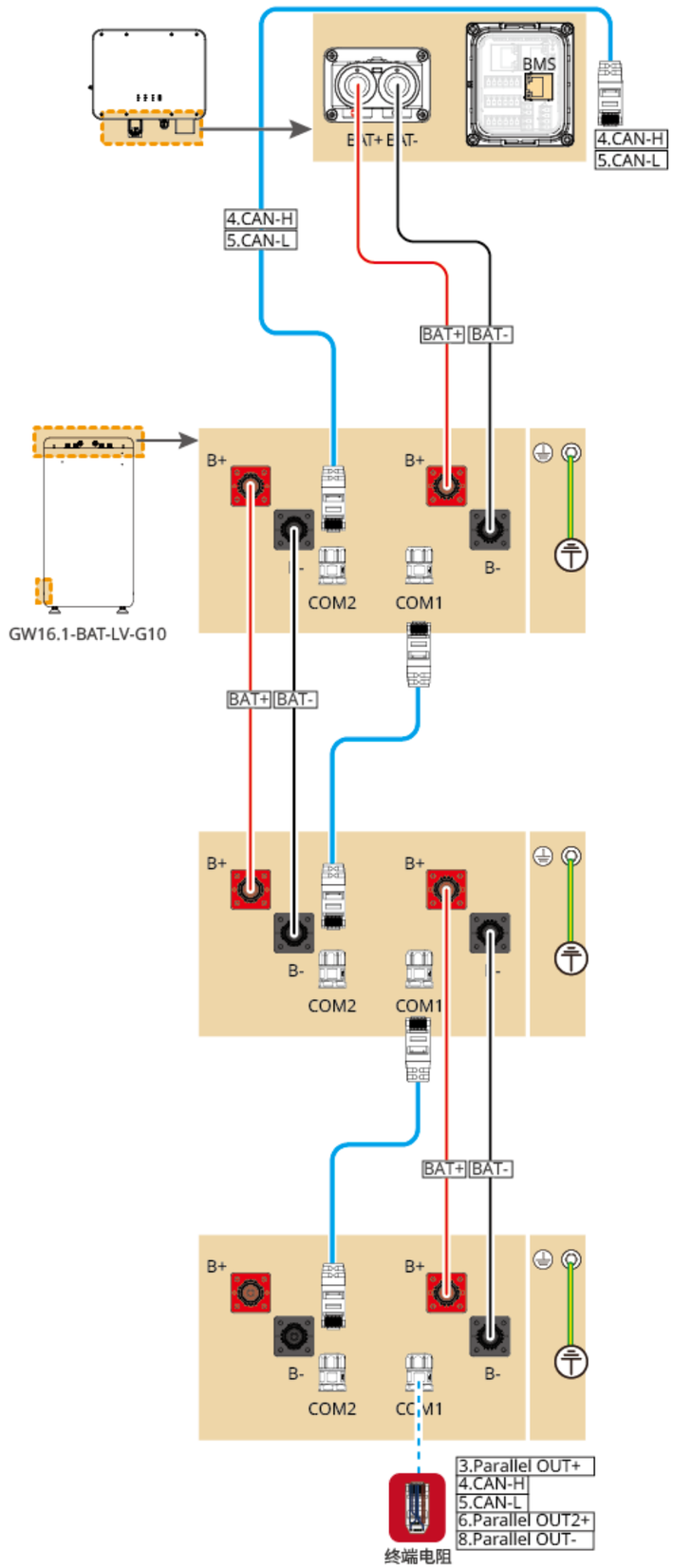

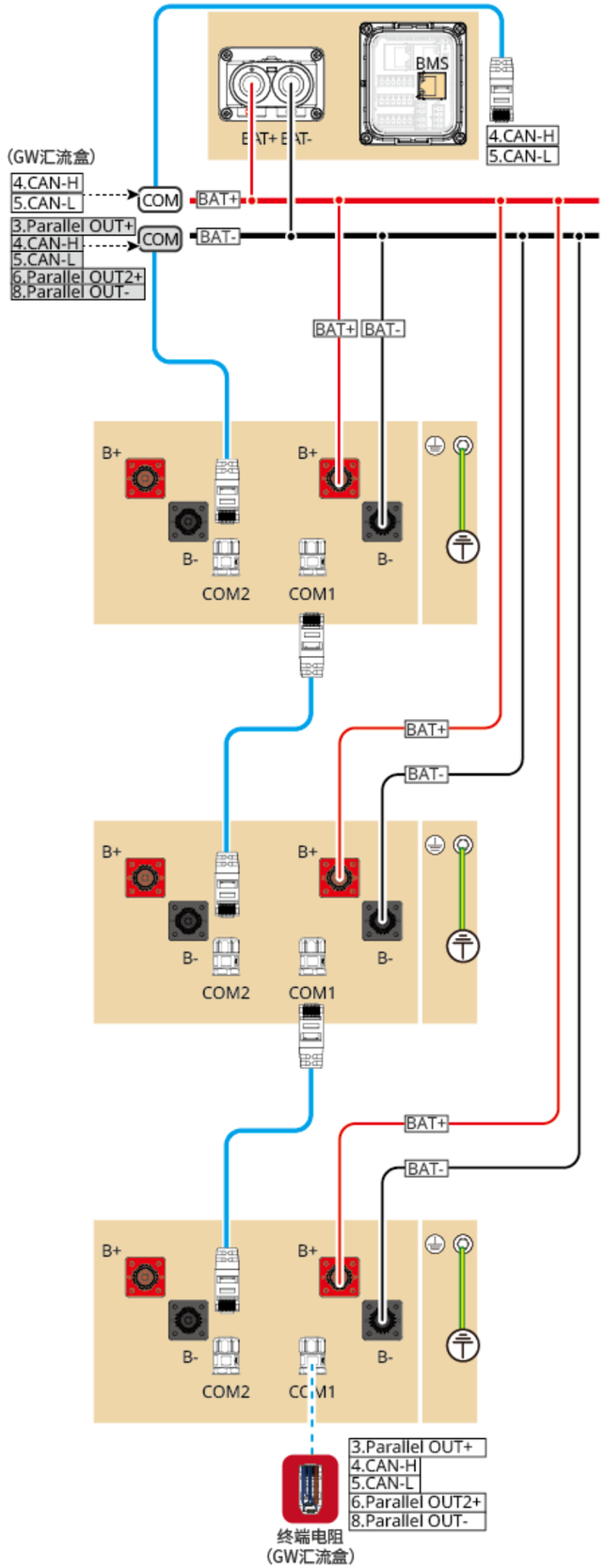

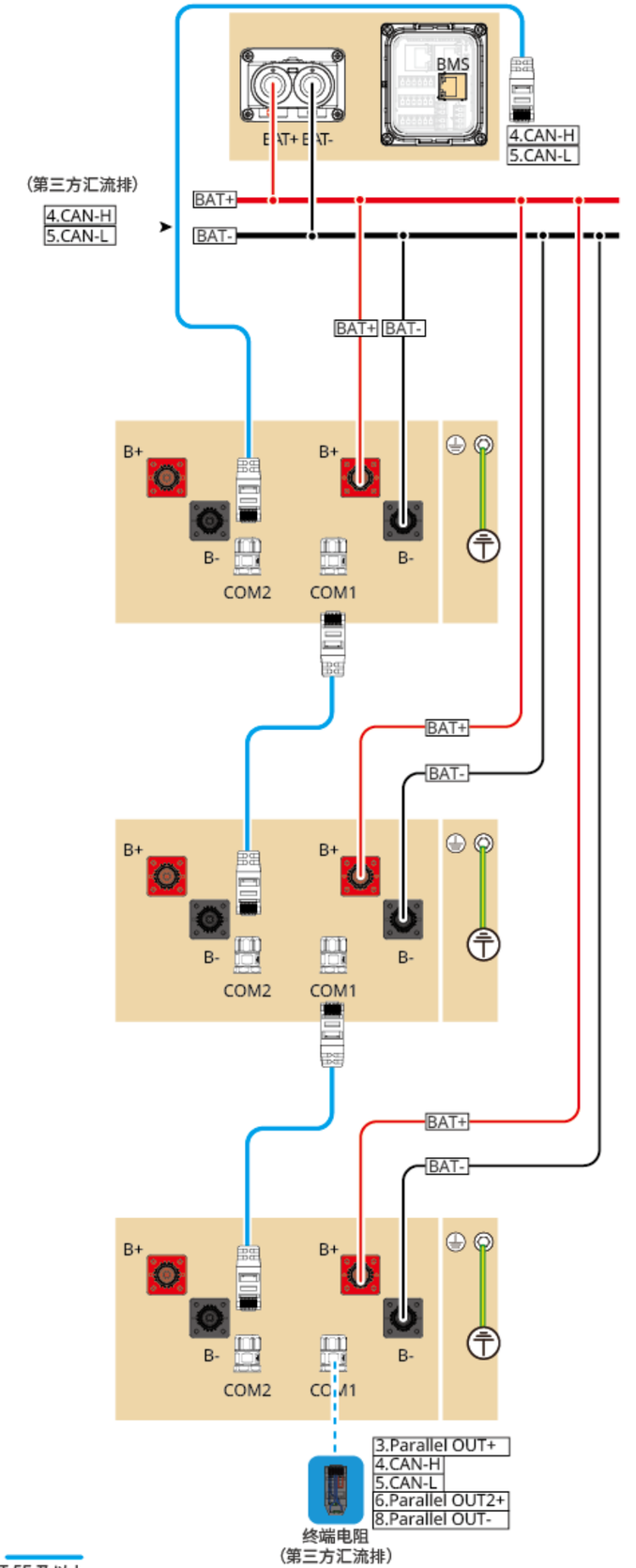

CAT 5E 及以上

ESU10NET0043

05 Equipment Commissioning

SolarGo app

SEMS Portal app

In parallel scenarios, the software version of SolarGo app should be 5.4.0 or above.
Follow the prompts to connect the device.

Quick Settings

Method I: Tap **Home** > **Settings** > **Quick Settings** to complete quick settings step by step.
Installer password: goodwe2010
Method II: Using LCD screen to finish quick settings. Click on the screen or use buttons to operate.
> **Quick Setting**，follow the prompts to complete inverter settings.Advanced function page initial password:1111

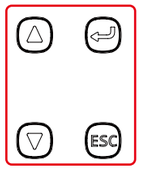

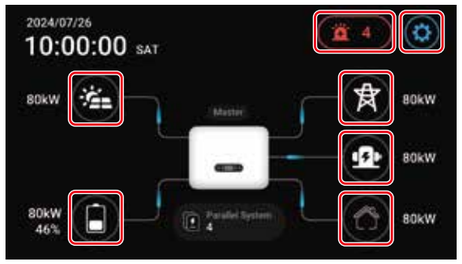

ESU10DSC0006

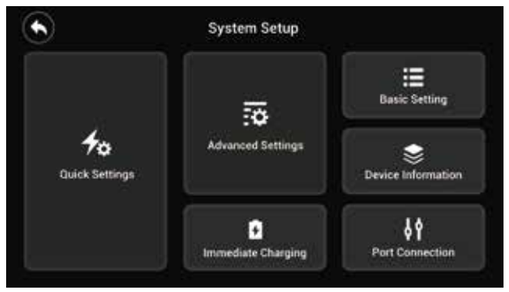

ESU10CDN0007

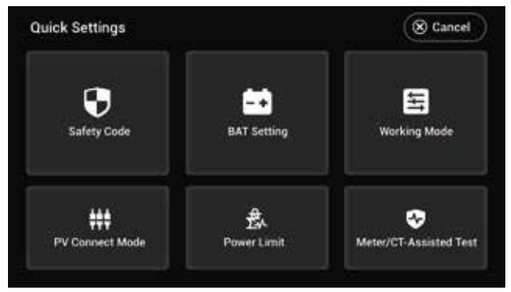

ESU10CDN0008

Setting Safety Code

Setting safety code via SolarGo APP

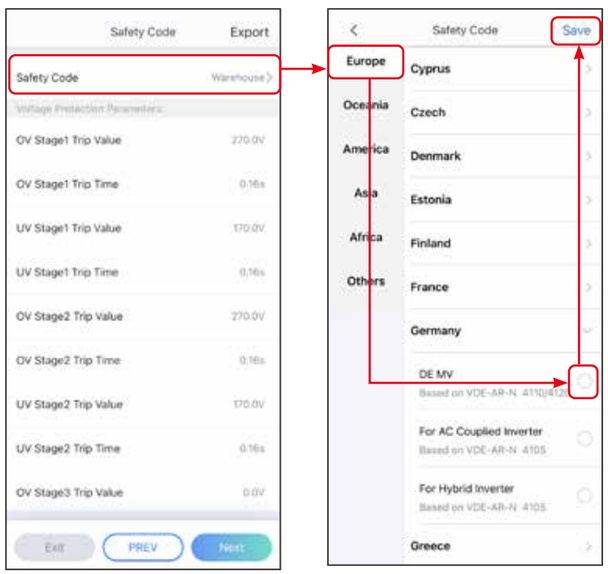

Setting safety code via LCD screen

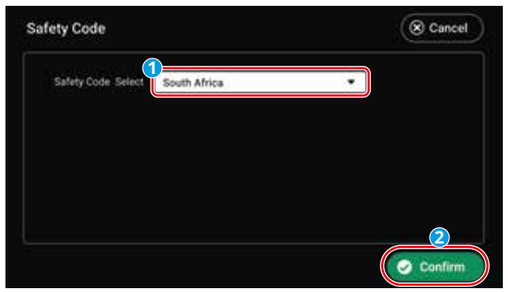

ESU10CDN0009

Setting Inverter Quantity (Only For Parallel Connections,APP only)

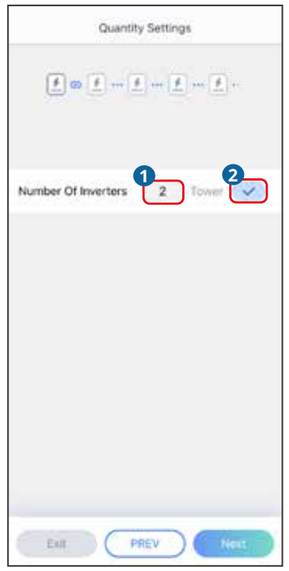

Setting the BAT Connect Mode via SolarGo APP

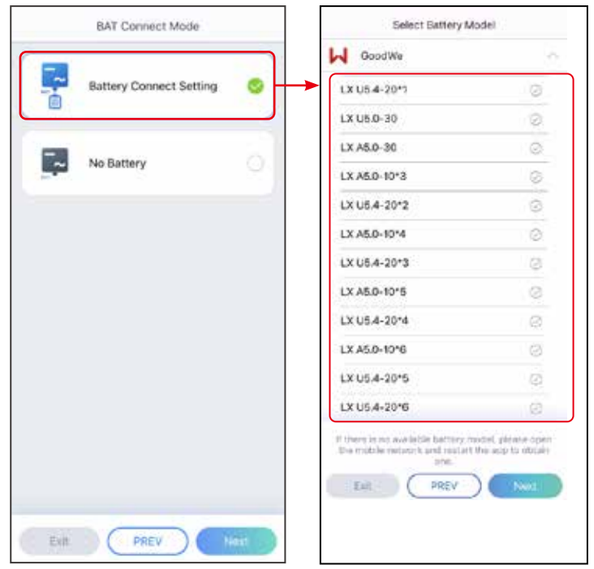

Setting BAT parameter via LCD screen

Lithium battery

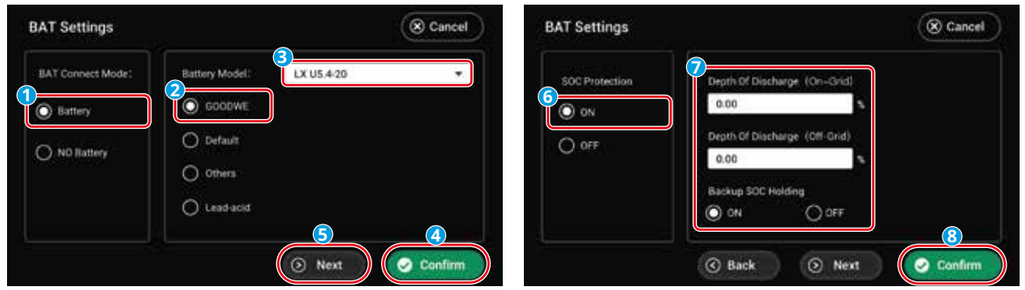

ESU10CDN0010

Lead-acid battery

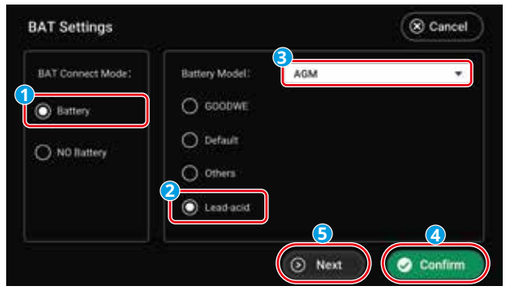

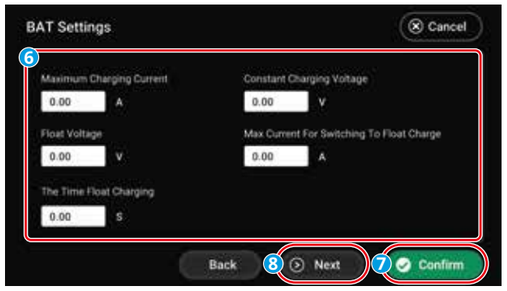

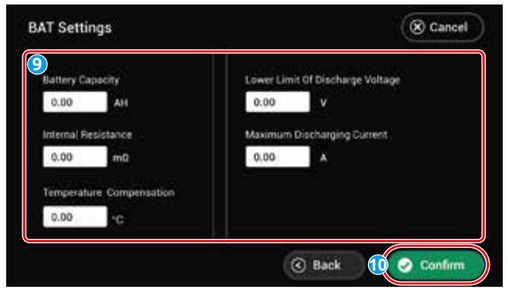

ESU10CDN0011

Setting working mode via LCD screen

Self-use Mode

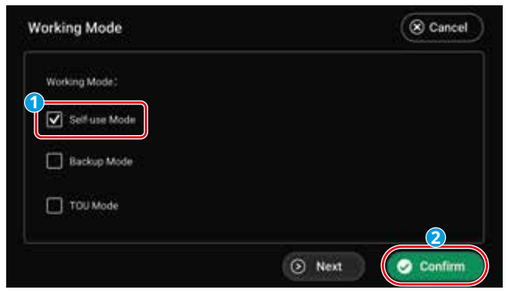

ESU10CDN0012

Back-up Mode

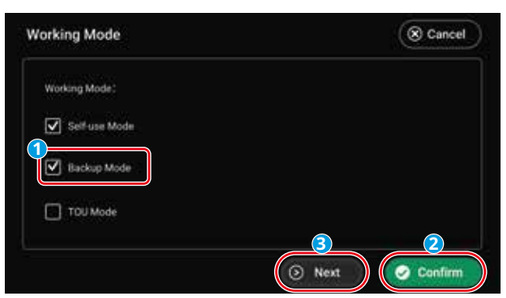

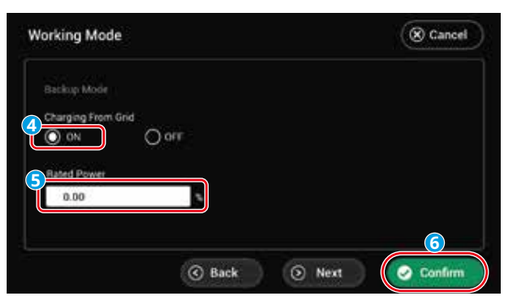

ESU10CDN0013

TOU Mode

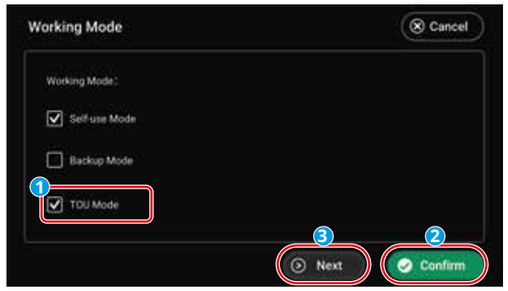

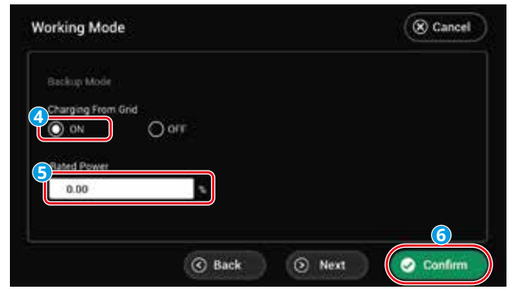

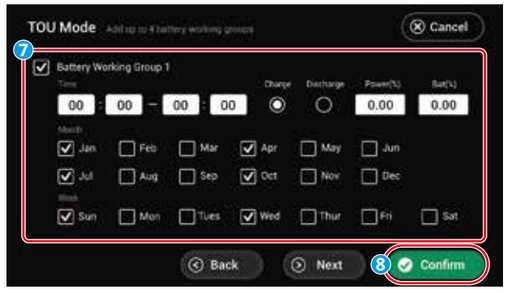

ESU10CDN0014

Setting working mode via SolarGo APP

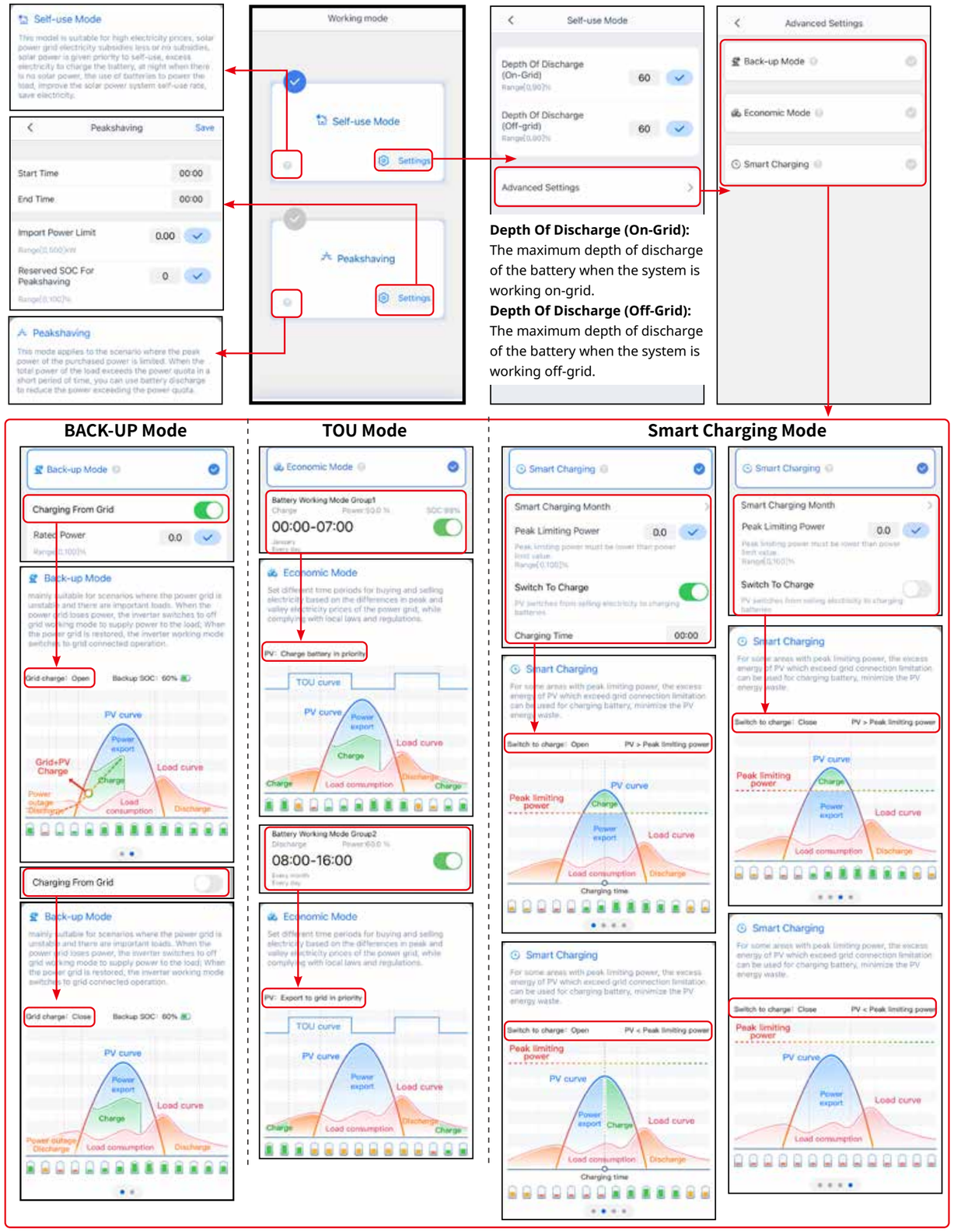

Depth Of Discharge (On-Grid): The maximum depth of discharge of the battery when the system is working on-grid.

Depth Of Discharge (Off-Grid): The maximum depth of discharge of the battery when the system is working off-grid.

Setting the Advanced Parameters

Tap **Home** > **Settings** > **Advanced Settings** to set the following functions.

Setting DRED/Remote Shutdown/RCR

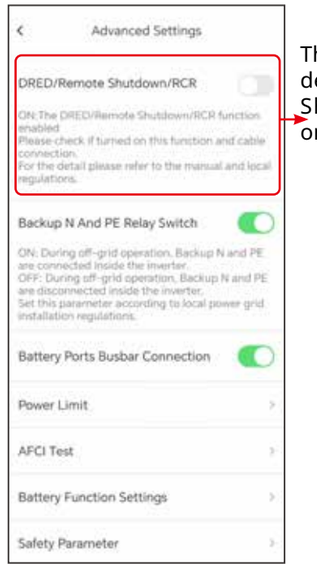

This function is disabled by default. To use the Remote Shutdown function, turn on this switch.

Setting Battery Functions



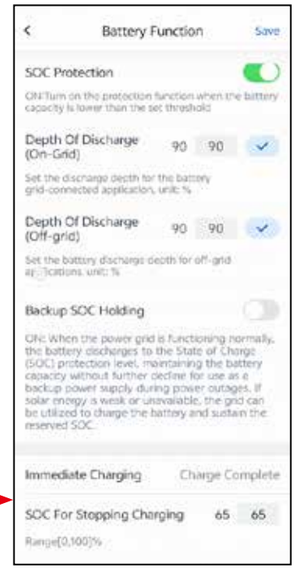

Through battery function settings, you can set parameters for battery connected in the system.

Setting Power Limit

Tap **Home** > **Settings** > **Advanced Settings** to set the following functions.



Setting power limit via LCD screen

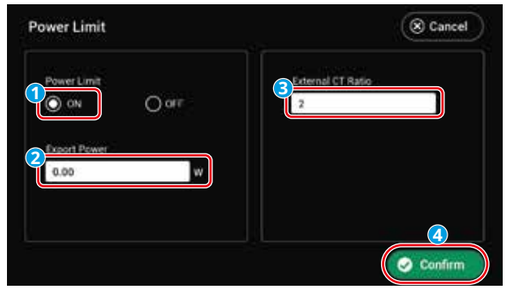

ESU10CON0016

Configuring the Network

Tap **Home** > **Settings** > **Communication Setting** to set network parameters.

WiFi/LAN Kit-20



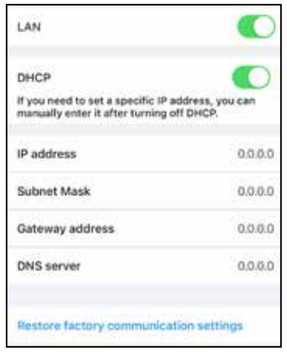

Setting GEN port

Tap **Home** > **Settings** > **Quick Settings** to set parameters for generator or load.

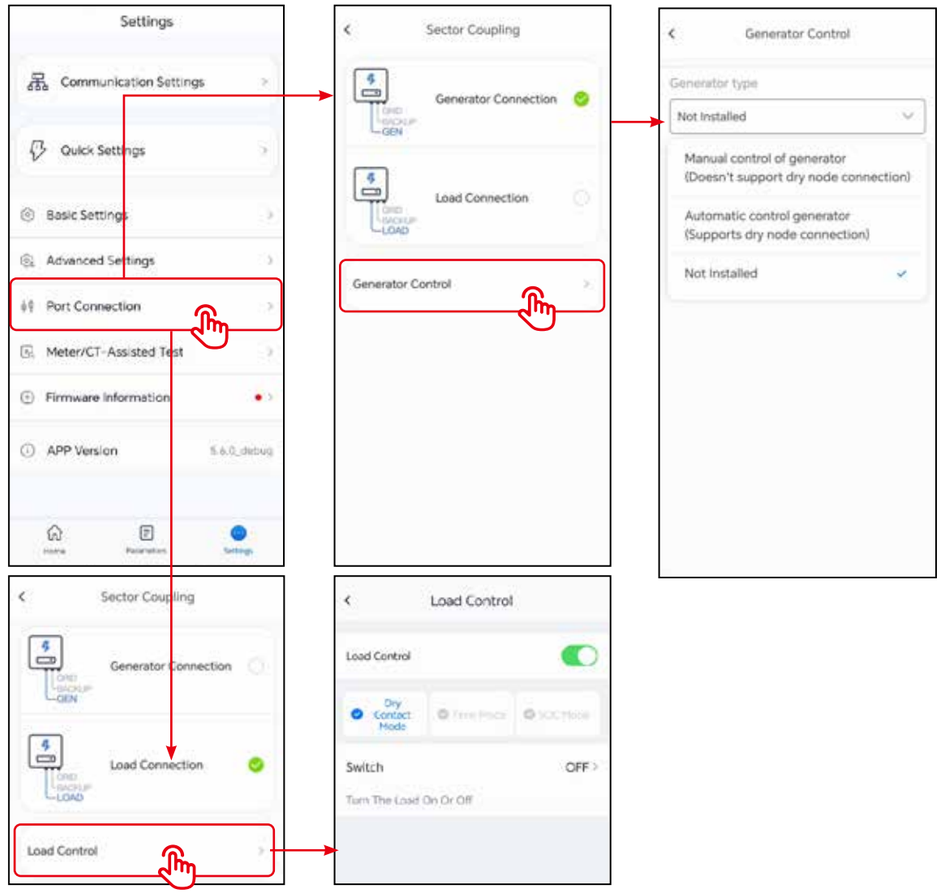

Settings generator parameters via LCD screen

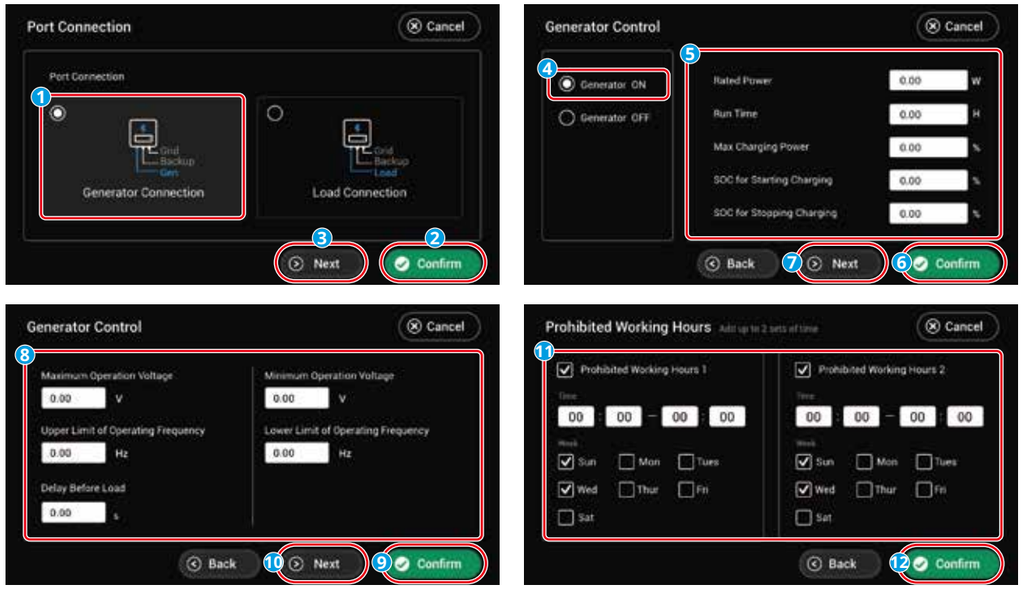

ESU10CDN0022

Settings Load Control via LCD screen

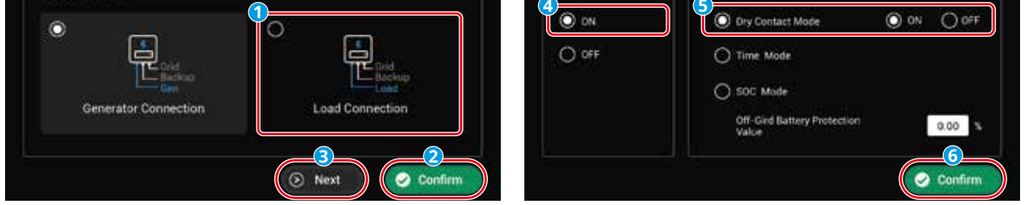

ESU10CDN0023

Creating a Power Plant

Create power plants and add equipments via SEMS Portal app.

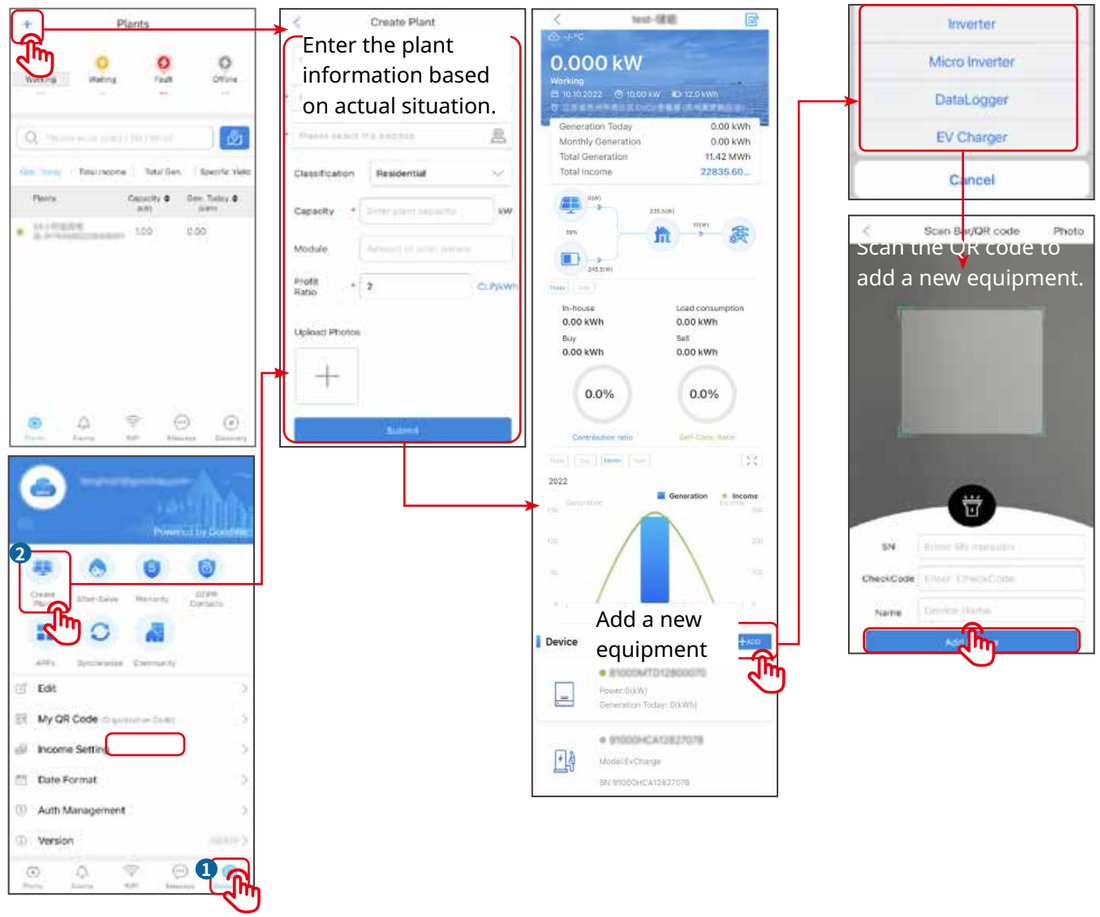

Create power plants and add equipments via SEMS+ app.

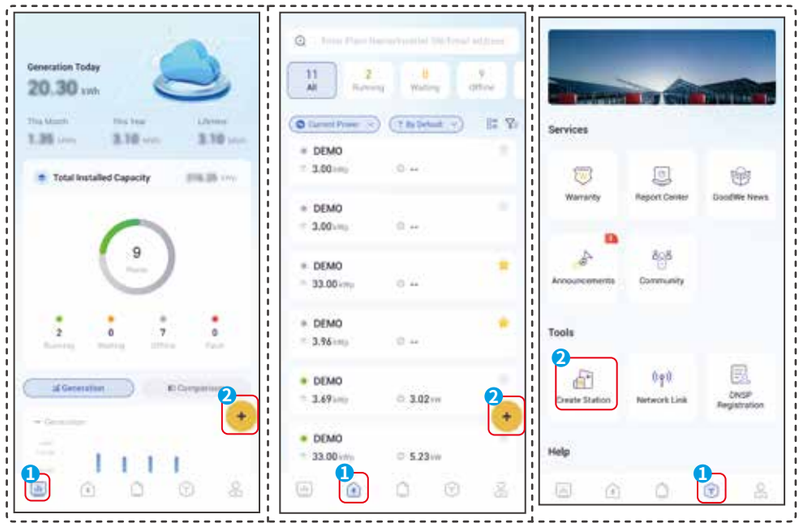

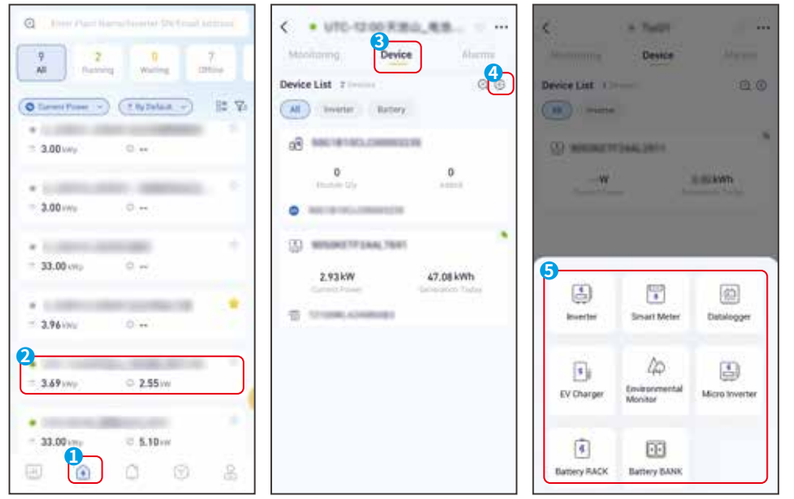

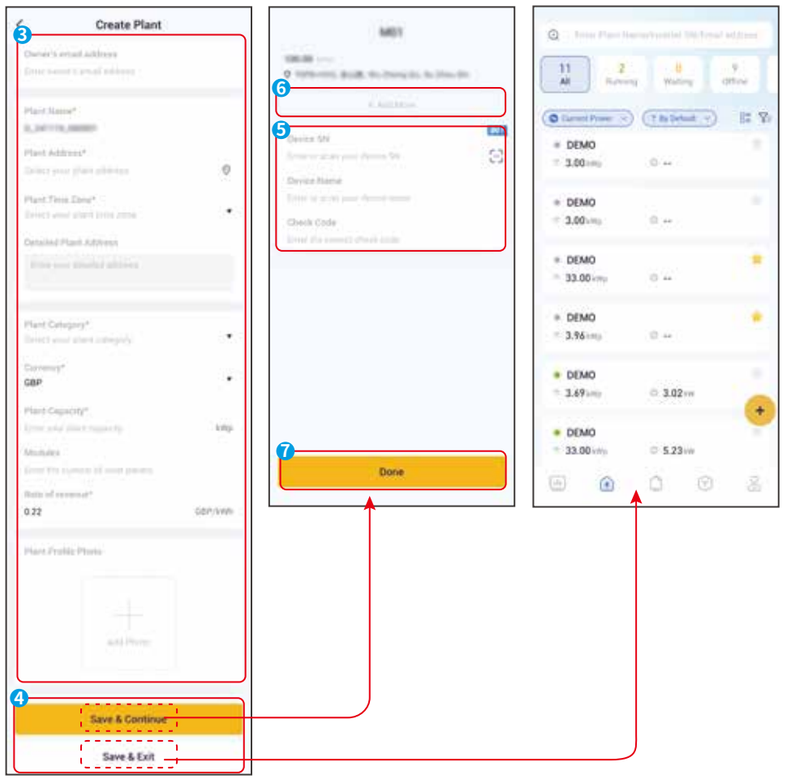

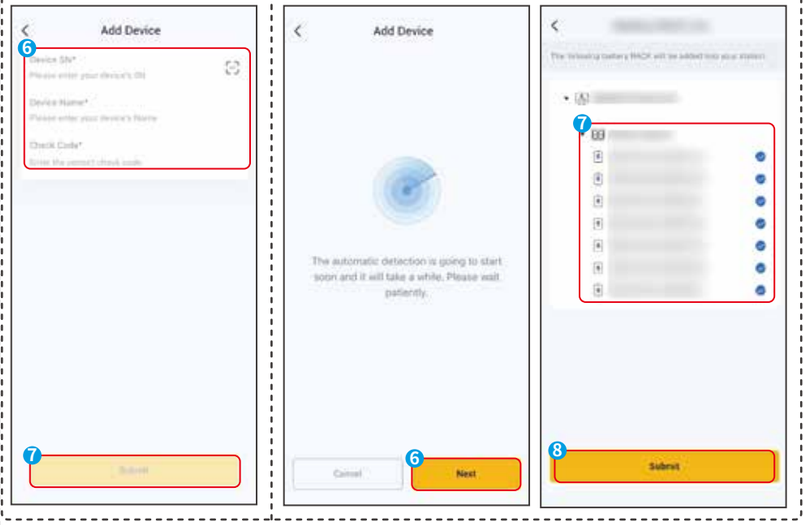

GoodWe Technologies Co., Ltd.
No. 90 Zijin Rd., New District,
Suzhou, 215011, China
www.goodwe.com
service@goodwe.com